LINE TECH

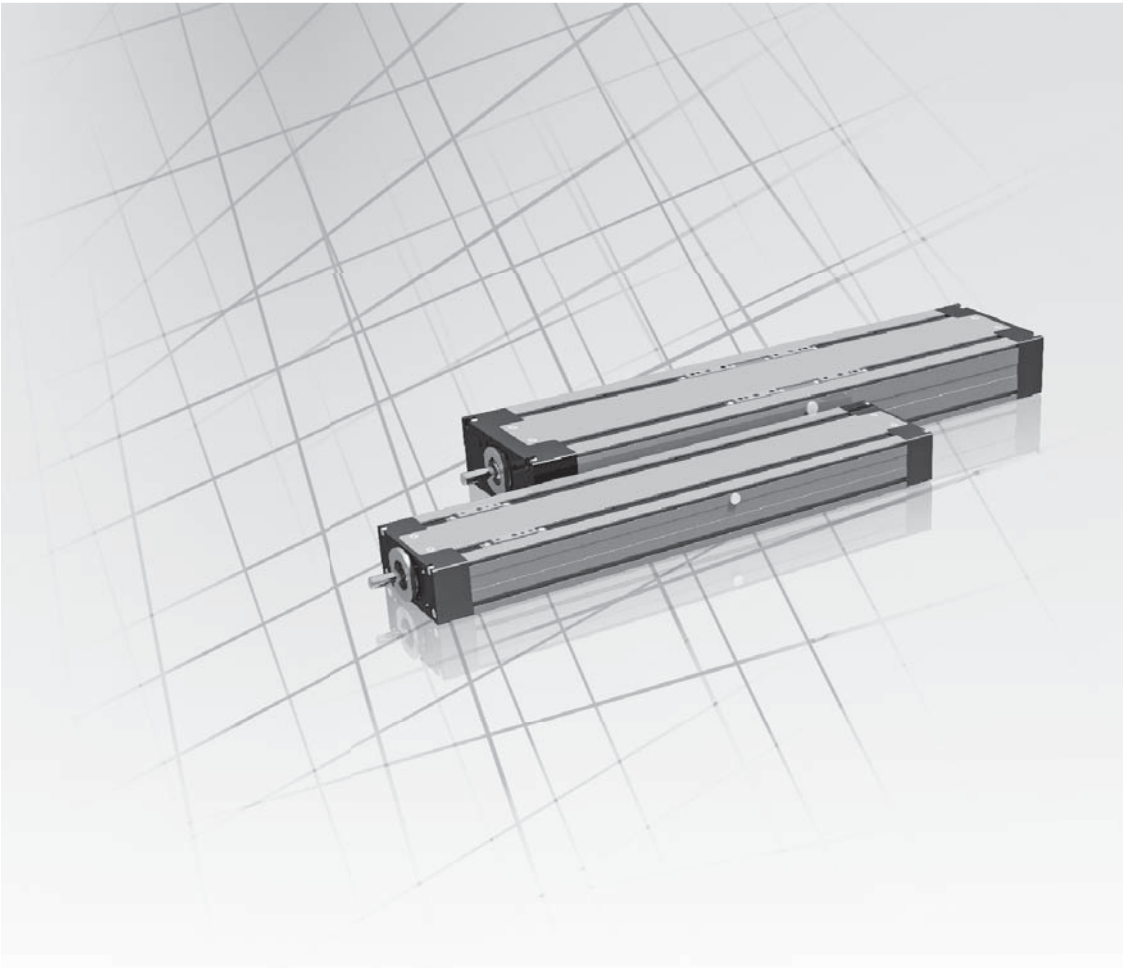

COMPACT UNITS WITH BALL SCREW

ASSEMBLY AND MAINTENANCE INSTRUCTIONS

(ENGLISH)

SWISS MADE LINEAR TECHNOLOGY

Contents

1. General 4
2. Use in Accordance with the Regulations 4
3. Use Not in Accordance with the Regulations 4
4. Declaration of incorporation 5
5. Safety, References, Symbols 7
   5.1 Safety Instructions 7
   5.2 Identification of references 7
   5.3 Symbols 7
6. Transport 8
   6.1 Transport, packaging and storage 8
   6.2 Scope of delivery 8
7. Compact unit (KE) with ball screw (BSD) 8
   7.1 Product overview 8
   7.2 Nameplate “Ordering of spare parts and accessories” 9
   7.3 Tightening torques for screws 10
8. Design and assembly of Compact Units with ball screw 10
   8.1 Assembly design versions with different motor mountings 10
   8.2 Technical data for ball screw (BSD) 11
   8.3 General technical details for Compact Units 12
   8.4 Permissible speeds 13
9. Dimensions, exploded views and parts lists 14
   9.1 Dimensions KE1.2…AR…N 14
      9.1.1 Parts list for exploded view 14
      9.1.2 Setup and assembly of the Compact Unit (exploded view) 15
   9.2 Dimensions KE1.2…AR…P 16
      9.2.1 Parts list for exploded view 16
      9.2.2 Setup and assembly of the Compact Unit (exploded view) 17
   9.3 Dimensions KE1.4…AR…N 18
      9.3.1 Parts list for exploded view 18
      9.3.2 Setup and assembly of the Compact Unit (exploded view) 19
   9.4 Dimensions KE1.4…AR…P 20
      9.4.1 Parts list for exploded view 20
      9.4.2 Setup and assembly of the Compact Unit (exploded view) 21
   9.5 Dimensions KE2.2...AR...N 22
      9.5.1 Parts list for exploded view 22
      9.5.2 Setup and assembly of the Compact Unit (exploded view) 23
   9.6 Dimensions KE2.2...AR...P 24
      9.6.1 Parts list for exploded view 24
      9.6.2 Setup and assembly of the Compact Unit (exploded view) 25
   9.7 Dimensions KE2.4...AR...N 26
      9.7.1 Parts list for exploded view 26
      9.7.2 Setup and assembly of the Compact Unit (exploded view) 27
   9.8 Dimensions KE2.4...AR...P 28
      9.8.1 Parts list for exploded view 28
      9.8.2 Setup and assembly of the Compact Unit (exploded view) 29
   9.9 Dimensions KE3.2...AR...N 30
      9.9.1 Parts list for exploded view 30
      9.9.2 Setup and assembly of the Compact Unit (exploded view) 31
   9.10 Dimensions KE3.2...AR...P 32
      9.10.1 Parts list for exploded view 32
      9.10.2 Setup and assembly of the Compact Unit (exploded view) 33
   9.11 Dimensions KE3.4...AR...N 34
      9.11.1 Parts list for exploded view 34
      9.11.2 Setup and assembly of the Compact Unit (exploded view) 35
   9.12 Dimensions KE3.4...AR...P 36
      9.12.1 Parts list for exploded view 36
      9.12.2 Setup and assembly of the Compact Unit (exploded view) 37

10. Deflection of Compact Units (KE) 38
10.1 Permissible deflection 38
11. Fastening accessories 40
11.1 Securing the Compact Unit with clamps 40
12. Limit switch 42
12.1 Attachment / assembly / plug connection 42
12.2 Limit switches / reference switch mounting overview 42
12.2.1 Limit switch mounting (exploded view) 44
12.2.2 Parts list for exploded view 44
13. Motor mounting 45
13.1 Straight, with ball screw 45
13.1.1 Motor attachments and parts list, straight with ball screw 45
13.1.2 Tightening torque of the clamping screws 45
13.2 Lateral, with ball screw 47
13.2.1 Tightening torque of the clamping screws 48
13.2.2 Motor attachments and parts list, lateral with ball screw 48
13.3 Calculation of the preload frequency 49
14. Connection plates 52
14.1 Measurement specifications of the connection plates with 1 carriage / 2 carriages 52
14.2 Assembly of the connection plates 54
14.3 Separate connection plates 54
14.4 Table substructures on connection plates 55
15. Cross table 56
15.1 Assembly 56
15.1.1 Cross table assembly type A... (Exploded view) 57
15.1.2 Cross table assembly type B... (Exploded view) 57
16. Commissioning 58
16.1 Operating conditions 58
16.2 Electrically connect the KE 58
17. Operation 59
18. Decommissioning 59
19. Maintenance - Service - Upkeep 60
19.1 Lubricant Quantities, Lubrication Points, Lubrication Interval 60

These instructions contain standard illustrations, so representations may deviate from the original. The scope of delivery for special designs, options or technical changes may differ from the explanations described here. We reserve the right to make changes for the purposes of technical improvement.

Despite taking great care when creating these assembly and maintenance instructions, printing errors cannot be excluded. We are grateful for any information alerting us to errors or poorly formulated/represented information in this document. All rights reserved. No part of these instructions may be reproduced or may be processed, duplicated or distributed in any form using electronic means without the written consent of LINE TECH AG.

LINE TECH AG ©
Date of creation: 11/2020 MS/RB

1. General

Warranty:
LINE TECH AG warrants compliance with the specifications expressly agreed upon in the confirmation and in general the execution of the order with the due care customary in the industry. The warranty covers the function of the Compact Unit and includes all defects that are demonstrably due to manufacturing or material defects.

Warranty period:
The warranty period (factory warranty) is twelve months from the date of delivery according to the general terms and conditions of sale and delivery, provided a longer period has not been agreed upon.

Warranty exclusion:
Excluded from the warranty are defects and faults for which LINE TECH AG is not responsible, such as natural wear, force majeure, improper handling, interventions on the part of the customer or third parties, excessive and improper use, unsuitable operating equipment, extreme environmental conditions and non-compliance with assembly, operating and maintenance instructions. Any warranty claims shall expire in such cases.

LINE TECH AG is only liable for customer damages that are directly related to the breach of contractual obligations and that have been caused by LINE TECH AG due to gross negligence. The liability for slight negligence on the part of LINE TECH AG or for actions of auxiliary persons commissioned by LINE TECH AG is excluded to the legally permitted extent. In no case is LINE TECH AG liable for direct or indirect consequential damages or third party damages. The exclusion or limitation of liability of LINE TECH AG also apply for the personal liability of its employees, workers, representatives and vicarious agents.

2. Use in Accordance with the Regulations

LINE TECH Compact Units with ball screws (BSD) are particularly well-suited for applications with average precision and high power requirements due to their structural features. The Compact Unit (incomplete machine in the sense of the Machinery Directive 2006/42/EC) is intended to be installed in machines and is used exclusively to move, precisely position and transport lightweight to medium-weight loads.

Compact Units with ball screws (BSD) can be installed in any position (horizontal, vertical or overhead). All relevant technical safety and accident prevention regulations, including DIN EN ISO 12100 (machine safety), as well as all documentation enclosed with the product, such as instructions, etc., must be observed when installing the incomplete machine in a complete machine.

The Compact Unit with ball screw may only be used in accordance with the intended use provided by LINE TECH AG. Any other use beyond this is considered improper. The manufacturer is not liable for any personal injury and/or property damage that results from said improper use. The risk is borne solely by the user. The assembly and maintenance instructions prescribed by the manufacturer must be observed to ensure use in accordance with the regulations. Only qualified specialist personnel may carry out the commissioning, assembly, maintenance and repair work.

In general, LINE TECH Compact Units are intended for linear movement as occurs during positioning, processing, transporting, palletising, loading, unloading, clamping, tensioning, testing, measuring, handling and manipulating workpieces or tools. In the process, the type-specific load data from the respective catalogue documents or supplementary technical calculations from LINE TECH are to be taken into consideration.

3. Use Not in Accordance with the Regulations

Use in application areas with special operating conditions, such as in the presence of moisture, dirt, dust (fibre glass and wood), aggressive atmospheres, potentially explosive environments, extreme climatic conditions and/or extreme temperature fluctuations, short-stroke and others are not consider proper and intended use. For special solutions, please contact LINE TECH AG.

4. Declaration of incorporation

Declaration of incorporation
within the meaning of the EC Machinery Directive 2006/42/EC, annex II B

The manufacturer

Line Tech AG
Europastrasse 19
8152 Glattbrugg

hereby declares that for the incomplete machine

Designation: Compact unit with ball screw (KE)
Material number: according to the nameplate LINE TECH AG

these basic requirements of the Machinery Directive 2006/42/EC have been applied and complied with:

- 1.1.2 Principles for the integration of safety
- 1.1.3 Materials and products
- 1.1.5 Machine design with respect to handling
- 1.3.2 Risk of breakage during operation
- 1.3.3 Risks from falling or ejected objects
- 1.3.4 Risks from surfaces, edges and corners
- 1.3.7 Risks from moving parts
- 1.3.9 Risk of uncontrolled movements
- 1.5.1 Electrical power supply
- 1.5.2 Static electricity
- 1.5.4 Assembly error
- 1.5.5 Extreme temperature
- 1.5.6 Fire
- 1.5.8 Noise
- 1.5.13 Emission of hazardous materials and substances
- 1.6.1 Maintenance of the incomplete machine
- 1.7.2 Warning of residual risks

Furthermore, it is stated that the specific technical documentation has been prepared according to annex VII part B. These will be transmitted to market surveillance authorities in the form of paper documents/in electronic form upon request.

Compliance with the provisions of additional EU guidelines, standards or specifications:

- EN ISO 12100:2010 Safety of Machinery - General Principles for Design - Risk assessment and risk reduction

The incomplete machine may then first be put into operation once it has been determined that the machine in which the incomplete machine is to be installed meets the provisions of the EC Machinery Directive 2006/42/EC, if relevant under this guideline.

The following person is authorised to compile the relevant technical documentation:

Name: Rolf Bünzli
Address: Europastrasse 19, CH-8152 Glattbrugg

Glattbrugg, 05 Nov. 2020

M. Schilbach

Michael Schilbach
Technical Sales Manager

Rolf Bünzli
Head of Quality Management

Notes

5. Safety, References, Symbols

5.1 Safety Instructions

The following safety and hazard instructions are for your personal protection, the protection of third parties and the protection of the Compact Unit. They must therefore be observed.

The following pictograms are used in these assembly and maintenance instructions as safety and hazard instructions:

DANGER
Indicates an imminent danger. Failure to observe this notice may result in death or serious injury.

WARNING
Indicates a potential hazardous situation. If this information is ignored, it could result in property damage or physical injury.

CAUTION
Indicates a possible hazard. Ignoring this information may result in injuries, such as cuts and crushing, etc. Make sure any sources of hazards are secured.

CAUTION
Indicates a possible hazard. Ignoring this information may lead to eye injuries. Wear protective goggles.

CAUTION
Indicates a possible hazard. De-energise the module. Secure the power supply from unintentional or unauthorised commissioning.

CAUTION
Indicates a possible hazard. Ignoring this information may lead to skin burns. Avoid skin contact and wear protective gloves.

Note
Indicates general information and work recommendations.

5.2 Identification of references

References are made to repeated or further information as follows:

→ 2.1 Reference to section 2.1

→ □ 5.1.1 Reference to image 5.1.1 (image 1 in section 5.1)

5.3 Symbols

Commissioning

Assembly

Travel speed

Securing with adhesive
(Observe the safety data sheet)

Maintenance

RPM

Tightening torque

Screw

Thermometer

Excerpt from the LINE TECH AG product catalogue

6. Transport

6.1 Transport, packaging and storage

The Compact Unit is a precision device. Its mechanics can be damaged from heavy impacts and bending, which can greatly impair its function. Axes with a length of more than 700 mm must always be supported during transport. In order to avoid transport damage, LINE TECH AG Compact Units are sufficiently packaged and protected against slipping and vibrations.

For storage, the Compact Unit should be placed in a well-padded sturdy crate and sufficiently protected against moisture, dirt and aggressive atmosphere.

6.2 Scope of delivery

The scope of delivery of the product includes:

- Compact unit according to the order confirmation
- Assembly and maintenance instructions
- Additional and special accessories according to the order

7. Compact unit (KE) with ball screw (BSD)

7.1 Product overview

Compact unit with ball screw, with a carriage

Compact unit with ball screw, with two carriages

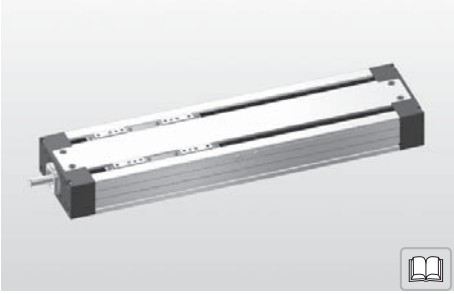

Compact unit with ball screw, with a carriage and connection plate

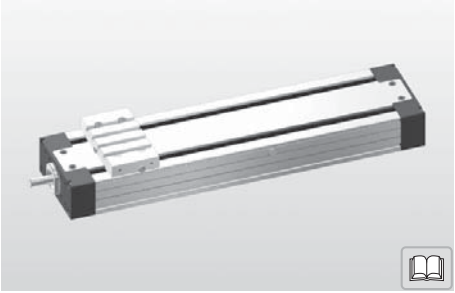

Compact unit with ball screw, with two carriages and connection plate

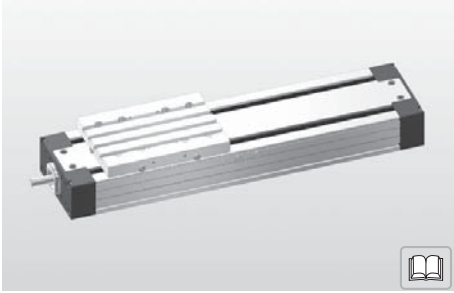

Design

- Compact aluminium base profile
- Ready-to-install Bridge Modules in any lengths
- Carriages made of aluminium

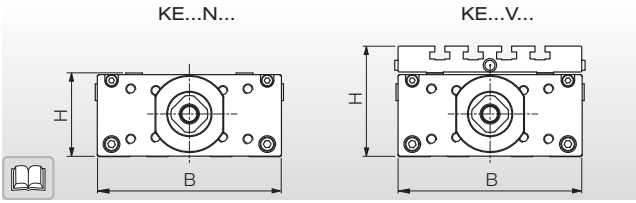

Compact unit Type	Dimensions W x H [mm]	Load ratings C_0 [kN]	 C [kN]
KE1.2...N...	90 x 40	11.2	6.5
KE1.2...V...	90 x 56	11.2	6.5
KE1.4...N...	90 x 40	22.5	13.0
KE1.4...V...	90 x 56	22.5	13.0
KE2.2...N...	110 x 50	35.0	18.0
KE2.2...V...	110 x 66	35.0	18.0
KE2.4...N...	110 x 50	70.0	36.0
KE2.4...V...	110 x 66	70.0	36.0
KE3.2...N...	145 x 65	59.9	34.2
KE3.2...V...	145 x 85	59.9	34.2
KE3.4...N...	145 x 65	119.9	68.4
KE3.4...V...	145 x 85	119.9	68.4

Compact Units can be installed and assembled by qualified personnel using these assembly and maintenance instructions.

The units must not be opened under any circumstances. If a unit is opened, safe operation can no longer be guaranteed!

7.2 Nameplate “Ordering of spare parts and accessories”

The following information is to be taken from the nameplate in order to get a clear identification of the unit. This information is to be given to the manufacturer immediately if there are problems with the Compact Unit:

1. Name of the unit
2. Type designation
3. Serial number
4. Date of production (calendar week/year)
5. Date of repair (If available)

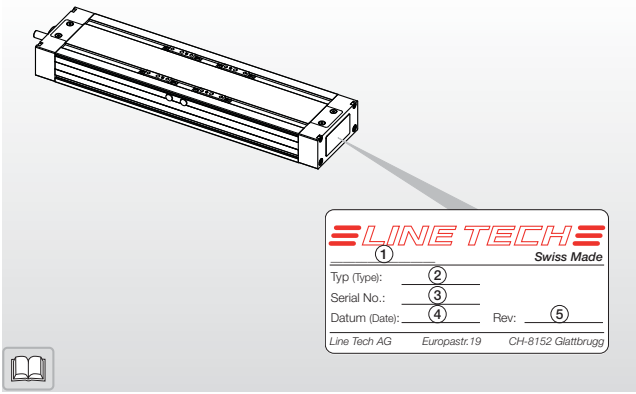

7.3 Tightening torques for screws

Screws of the strength class 8.8 are used by default. If other screws are used, these are specially labelled.

The tightening torques recommended by LINE TECH AG are defined in the table below.

Tightening torque $M_{A\ max.}$ [Nm] — Friction factor for screws μ = 0.120

Screw according to	Material class	Thread size								
		M2	M2.5	M3	M4	M5	M6	M8	M10	M12
ISO 4762	8.8	0.36	0.73	1.27	3.00	5.90	10.10	24.60	48.00	84.00
ISO 4762	12.9	0.60	1.23	2.14	5.10	10.00	17.40	42.20	83.00	144.00
ISO 7380-1	10.9	0.25	0.50	0.90	2.00	4.00	7.20	12.00	23.00	58.00

8. Design and assembly of Compact Units with ball screw

8.1 Assembly design versions with different motor mountings

LINE TECH Compact Units with ball screw can be delivered in various design versions and with different prepared motor mountings → 13
Dimensions for Compact Units KE1, KE2 and KE3 → 9.1 - 9.12

Assembly stage 01
Free spindle end

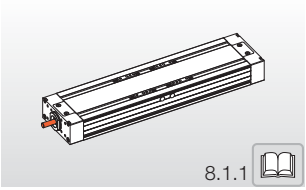

Assembly stage 02
With coupling and intermediate flange

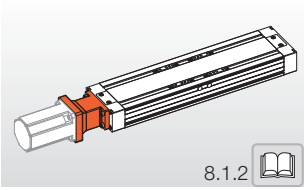

Assembly stage 04
Belt drive housing for lateral motor mounting right

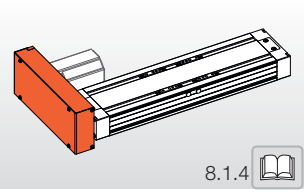

Assembly stage 05
Belt drive housing for lateral motor mounting left

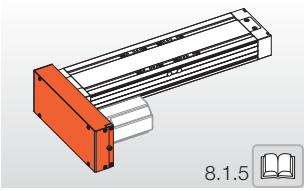

Assembly stage 06
Belt drive housing for lateral motor mounting top

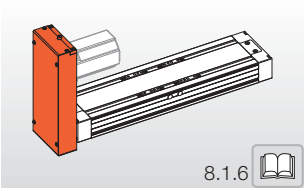

Assembly stage 07
Belt drive housing for lateral motor mounting bottom

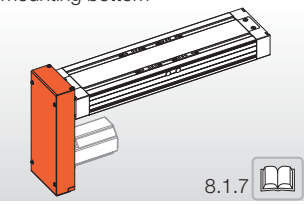

8.2 Technical data for ball screw (BSD)

KE	BSD	Axial load rating		Positioning accuracy	Repeating accuracy	Accelera-tion	Axial play		Idle torque
Size	d x p	C_0	C_{dyn}			a_{max}	Type	Axial play	
	[mm]	[N]	[N]	[µm/mm]	[mm]	[m/s²]		[mm]	[Nm]
KE1...R...	12 x 5	3333	3099	52/300	< 0.03 [1]	10.0	R	< 0.02	0.020
					< 0.05 [1]		A	< 0.20	0.020
					< 0.01 [1]		V	—	0.090
	12 x 10	3333	3099	52/300	< 0.03 [1]	10.0	R	< 0.02	0.045
					< 0.05 [1]		A	< 0.20	0.045
					< 0.01 [1]		V	—	0.180
KE2...R...	16 x 5	4551	4327	52/300	< 0.03 [1]	10.0	R	< 0.02	0.030
					< 0.05 [1]		A	< 0.20	0.030
					< 0.01 [1]		V	—	0.100
	16 x 10	4551	4327	52/300	< 0.03 [1]	10.0	R	< 0.02	0.060
					< 0.05 [1]		A	< 0.20	0.060
					< 0.01 [1]		V	—	0.200
	16 x 16	4551	4327	52/300	< 0.03 [1]	10.0	R	< 0.02	0.120
					< 0.05 [1]		A	< 0.20	0.120
					< 0.01 [1]		V	—	0.320
KE3...R...	20 x 5	5705	4912	52/300	< 0.03 [1]	10.0	R	< 0.02	0.050
					< 0.05 [1]		A	< 0.20	0.050
					< 0.01 [1]		V	—	0.120
	20 x 10	5705	4912	52/300	< 0.03 [1]	10.0	R	< 0.02	0.100
					< 0.05 [1]		A	< 0.20	0.100
					< 0.01 [1]		V	—	0.250
	20 x 20	5705	4912	52/300	< 0.03 [1]	10.0	R	< 0.02	0.200
					< 0.05 [1]		A	< 0.20	0.200
					< 0.01 [1]		V	—	0.400

d x p = screw diameter x thread pitch
[1] backlash not factored in
R = reduced play
A = with axial play
V = preloaded

8.3 General technical details for Compact Units

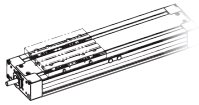

KE	Movement speed		Moments of inertia		Stroke max.	Cover	Feed and friction force	Moved mass
			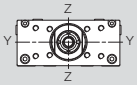					
Type	Guide v_{max} [m/s]	Drive v_{max} [m/s]	I_Y [cm⁴]	I_Z [cm⁴]	[mm]		F_V [N]	m_b [kg]
KE1.2...R...	3.0	2)	11.5	95.5	1315	without	8.00	0.370
						with	12.00	
KE1.4...R...	3.0	2)	11.8	95.5	1250	without	12.00	0.680
						with	16.00	
KE2.2...R...	5.0	2)	29.4	242.5	1375	without	10.00	0.790
						with	15.00	
KE2.4...R...	5.0	2)	29.4	242.5	1290	without	15.00	1.370
						with	20.00	
KE3.2...R...	5.0	2)	93.3	746.0	1850	without	15.00	1.460
						with	20.00	
KE3.4...R...	5.0	2)	93.3	746.0	1750	without	20.00	2.470
						with	25.00	

2) for spindle drive, dependent on rotational speed characteristics, spindle length and corresponding critical rotational speed

8.4 Permissible speeds

For ball screw drive, note the rotational speed characteristics, spindle length and relevant critical rotational speed as well as engine speed

Permissible speed KE1 with BSD ø 12 x..."

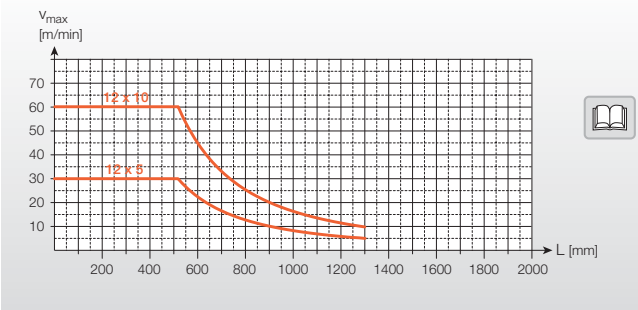

Permissible speed KE2 with BSD ø 16 x ..."

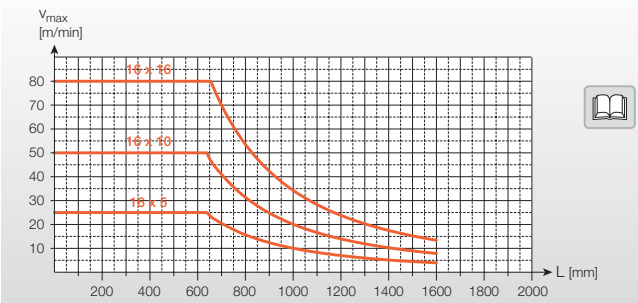

Permissible speed KE3 with BSD ø 20 x..."

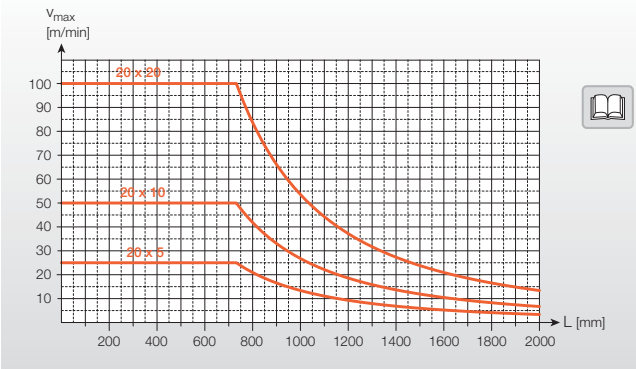

Legend:

1) Greater accuracy on request
L = Overall length of Compact Unit

9. Dimensions, exploded views and parts lists

9.1 Dimensions KE1.2…AR…N

1 carriage, ball screw and cover, without buffer

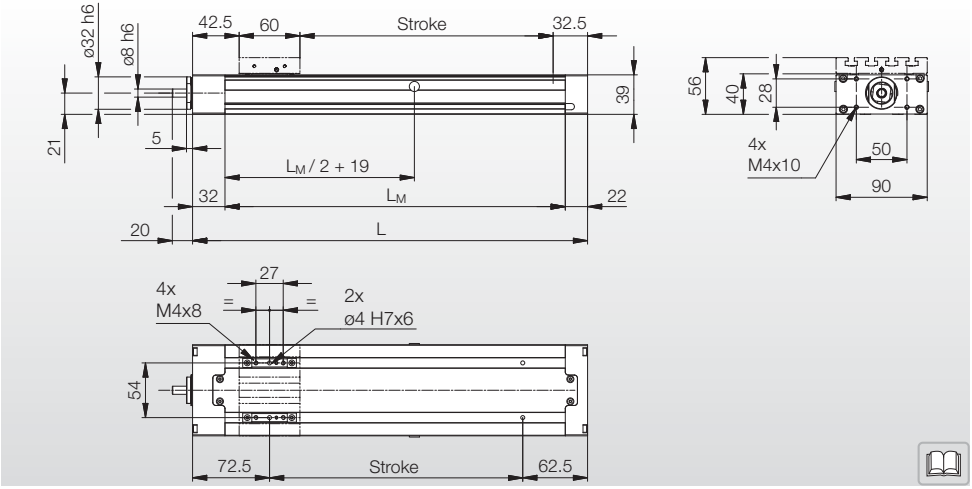

Nominal size	Dimensions				
Designation	L (without buffer) [mm]	L_M [mm]	Spindle length [mm]	Length of protective ribbon [mm]	Weight [kg]
KE1.2…AR…N	Stroke + 140	L – 54	L + 10	2 x stroke + 231	1.77 kg + 0.410 kg/100 mm stroke

9.1.1 Parts list for exploded view → 9.1.2

Assembly of attachments according to the corresponding chapters → 11 / 12 / 13 / 14
LINE TECH recommends ordering the superordinate assemblies
Ordering spare parts and accessories requires the information from the nameplate → 7.2

Position	Designation	Position	Designation
1	Base profile	6	Complete covers
2	Sealing plug	7	Front carriage
3	Linear rail	8	-
4	Screw on linear rail	9	-
5	End plate with ball screw	10	End plate opposite the drive side
5.1	Complete ball screw	11	Cover profile
5.1.1	Angular contact ball bearings	12	-
5.1.2	Lock nut	13	-
5.1.3	Needle bearing	14	-

9.1.2 Setup and assembly of the Compact Unit (exploded view)

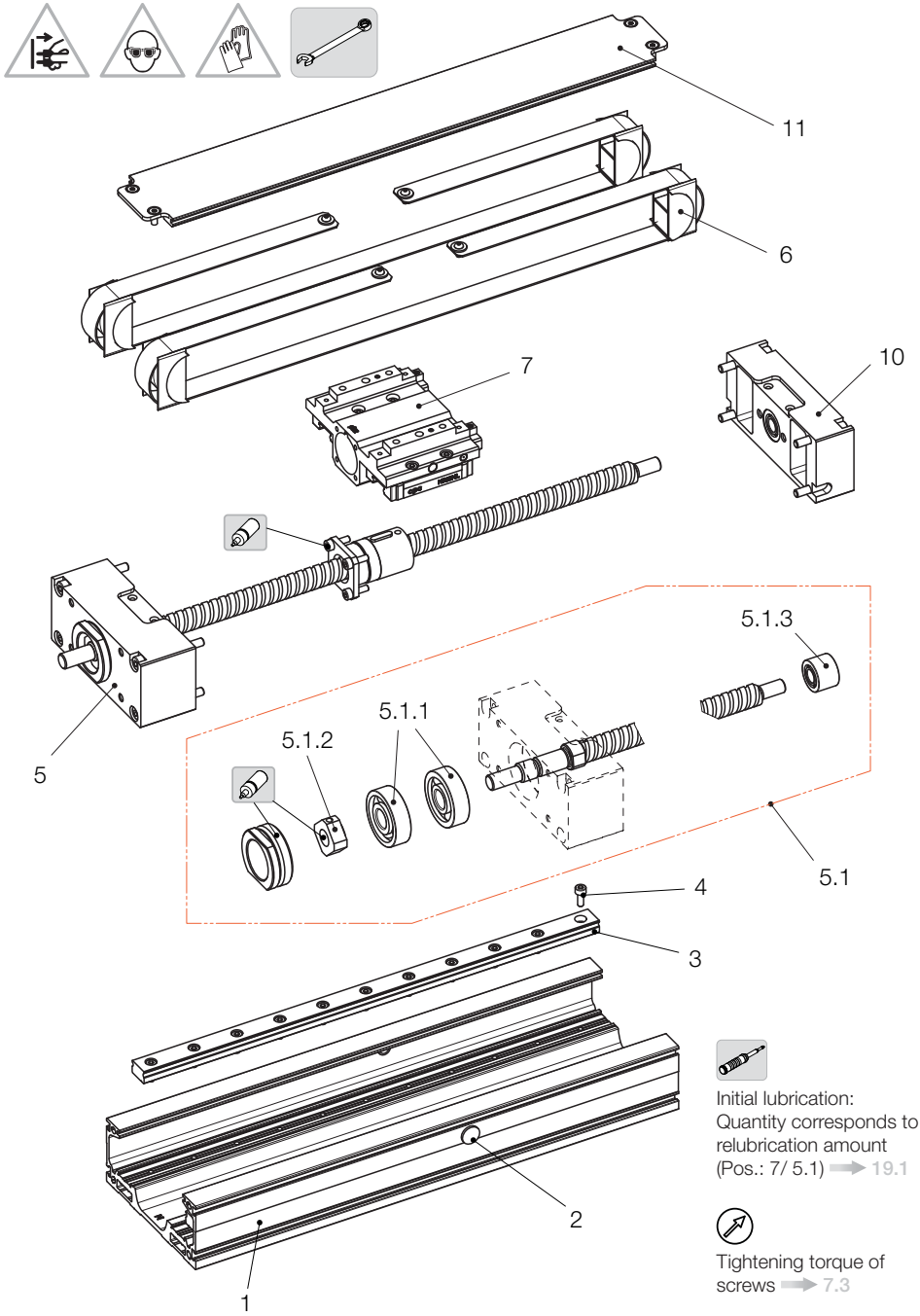

Initial lubrication:
Quantity corresponds to 2x relubrication amount (Pos.: 7/ 5.1) → 19.1

Tightening torque of screws → 7.3

9.2 Dimensions KE1.2…AR…P

1 carriage, ball screw and cover, with buffer

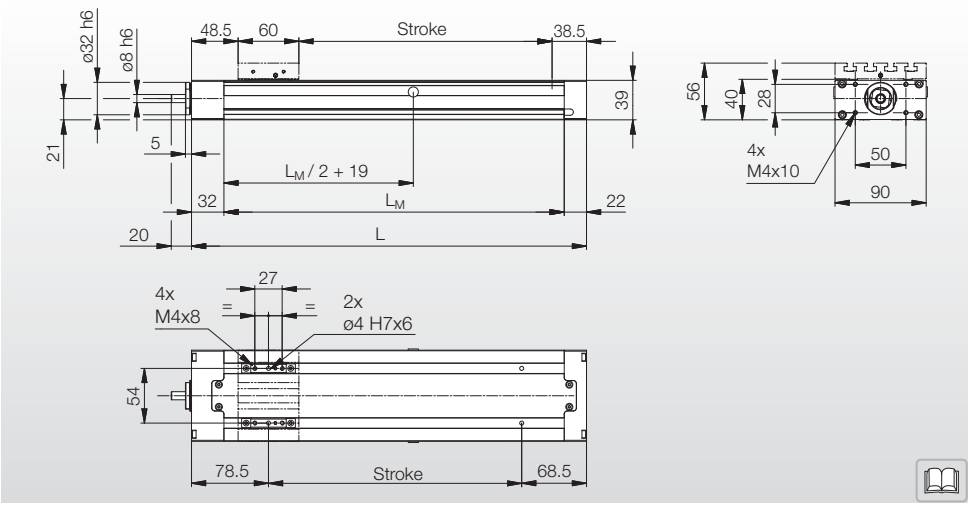

Nominal size	Dimensions				
Designation	L (without buffer) [mm]	L_M [mm]	Spindle length [mm]	Length of protective ribbon [mm]	Weight [kg]
KE1.2…AR…P	Stroke + 152	L – 54	L + 10	2 x stroke + 255	1.85 kg + 0.410 kg/100 mm stroke

9.2.1 Parts list for exploded view

→ □ 9.2.2

Assembly of attachments according to the corresponding chapters → 11 / 12 / 13 / 14
LINE TECH recommends ordering the superordinate assemblies
Ordering spare parts and accessories requires the information from the nameplate → 7.2

Position	Designation	Position	Designation
1	Base profile	6	Complete covers
2	Sealing plug	7	Front carriage
3	Linear rail	8	-
4	Screw on linear rail	9	-
5	End plate with ball screw	10	End plate opposite the drive side
5.1	Complete ball screw	11	Cover profile
5.1.1	Angular contact ball bearings	12	-
5.1.2	Lock nut	13	-
5.1.3	Needle bearing	14	-

9.2.2 Setup and assembly of the Compact Unit (exploded view)

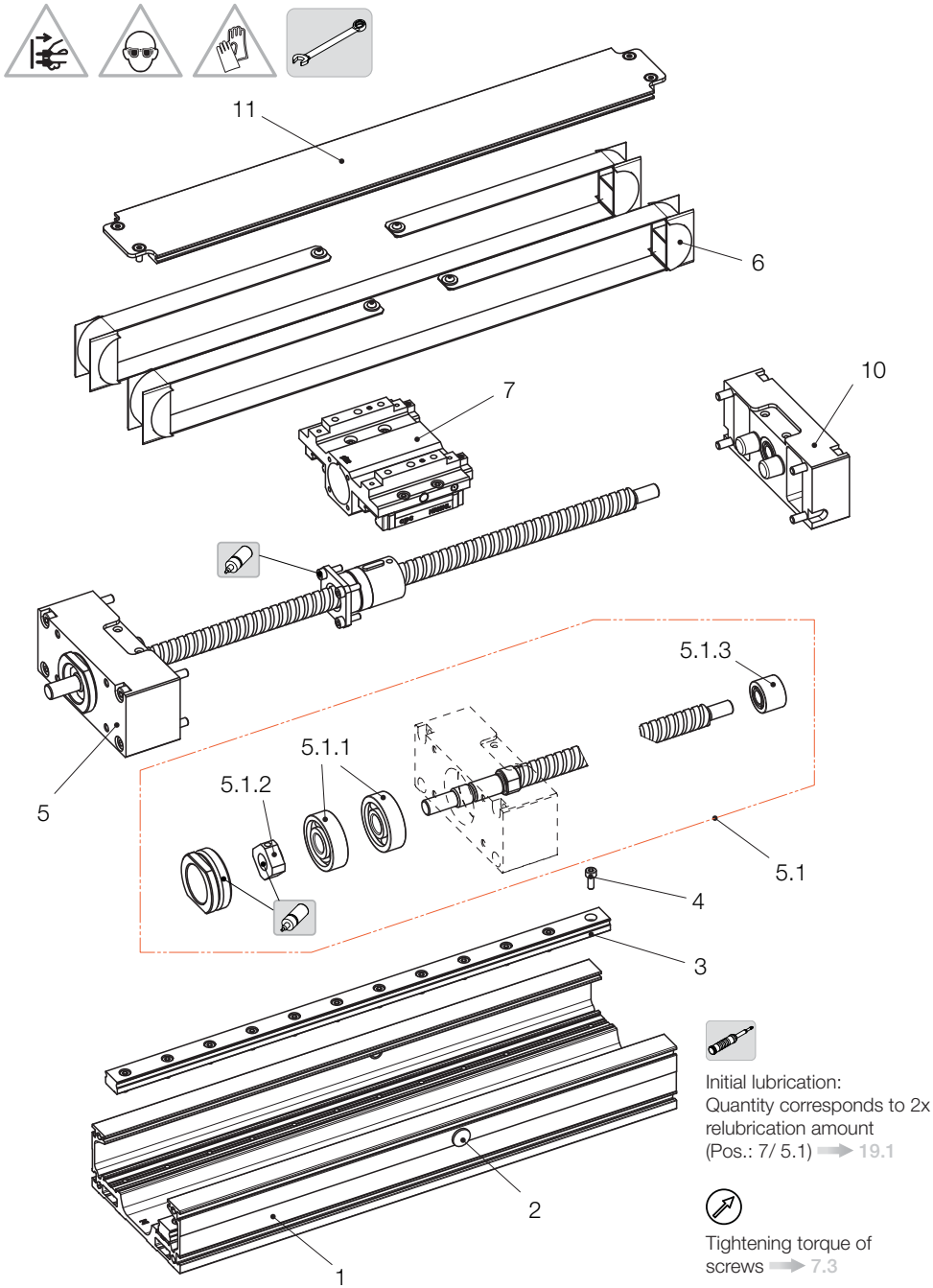

9.3 Dimensions KE1.4…AR…N

2 carriage, ball screw and cover, without buffer

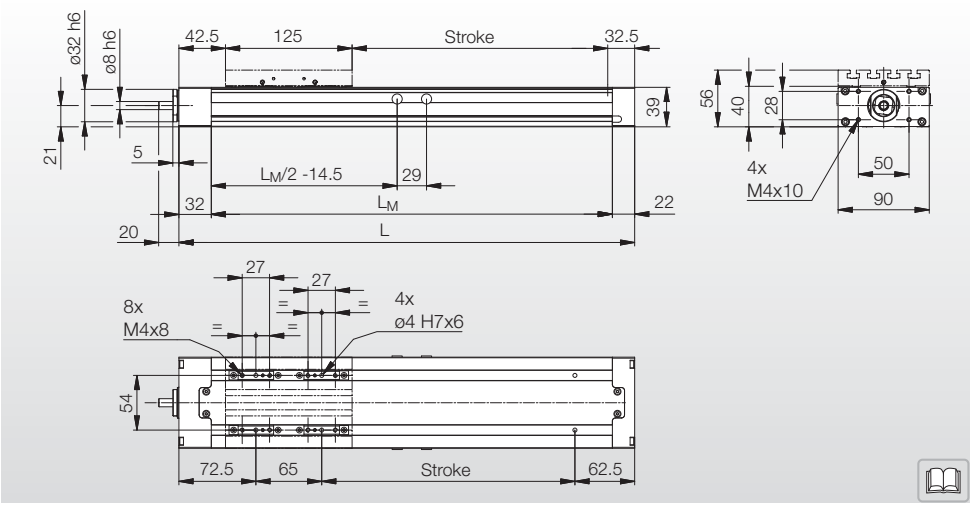

Nominal size	Dimensions				
Designation	L (without buffer) [mm]	L_M [mm]	Spindle length [mm]	Length of protective ribbon [mm]	Weight [kg]
KE1.4…AR…N	Stroke + 200	L – 54	L + 10	2 x stroke + 286	2.35 kg + 0.410 kg/100 mm stroke

9.3.1 Parts list for exploded view

→ 9.3.2

Assembly of attachments according to the corresponding chapters → 11 / 12 / 13 / 14
LINE TECH recommends ordering the superordinate assemblies
Ordering spare parts and accessories requires the information from the nameplate → 7.2

Position	Designation	Position	Designation
1	Base profile	6	Complete covers
2	Sealing plug	7	Front carriage
3	Linear rail	8	Rear carriage
4	Screw on linear rail	9	-
5	End plate with ball screw	10	End plate opposite the drive side
5.1	Complete ball screw	11	Cover profile
5.1.1	Angular contact ball bearings	12	Carriage connection
5.1.2	Lock nut	13	-
5.1.3	Needle bearing	14	-

9.3.2 Setup and assembly of the Compact Unit (exploded view)

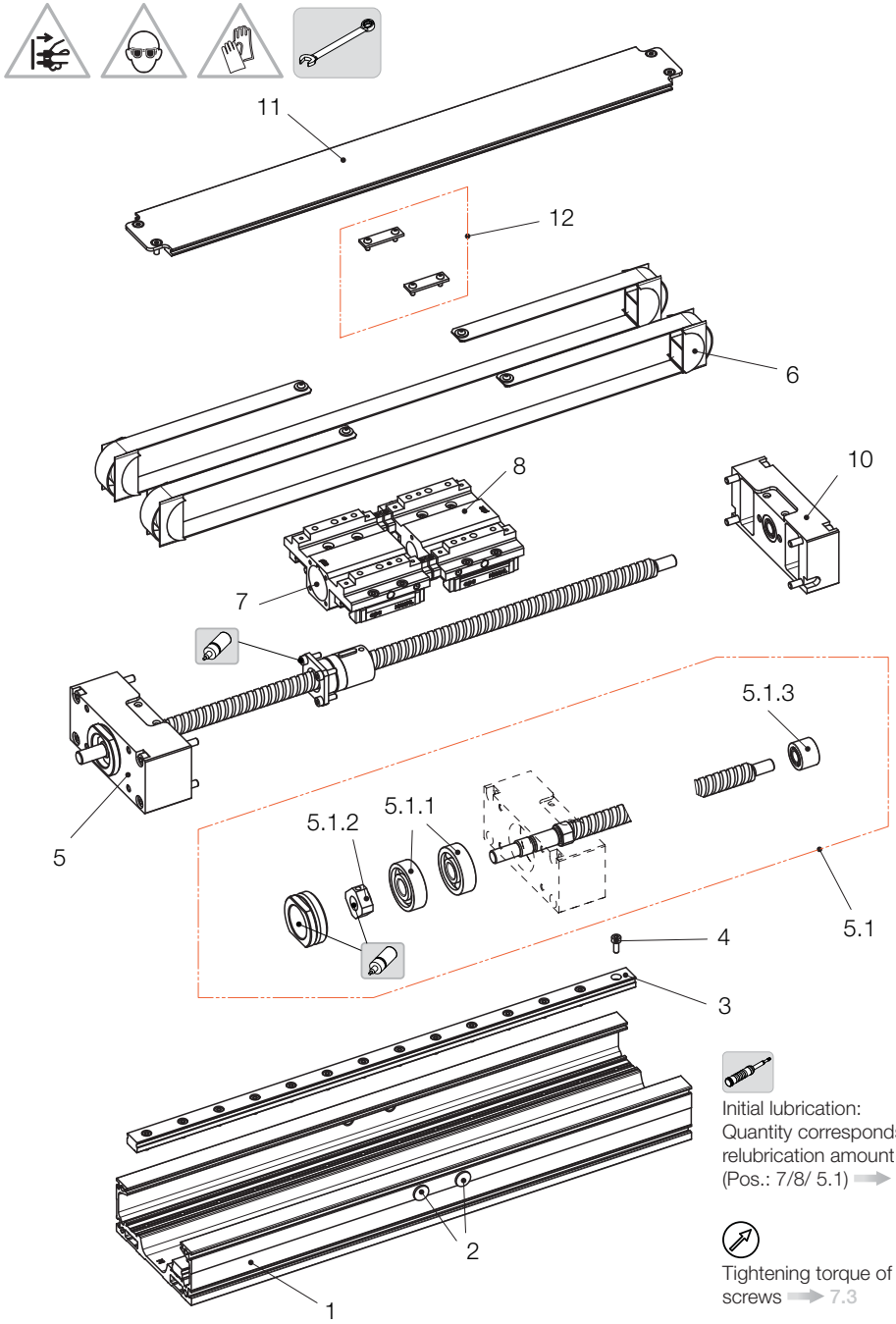

Initial lubrication:
Quantity corresponds to 2x relubrication amount (Pos.: 7/8/ 5.1) → 19.1

Tightening torque of screws → 7.3

9.4 Dimensions KE1.4…AR…P

2 carriage, ball screw and cover, with buffer

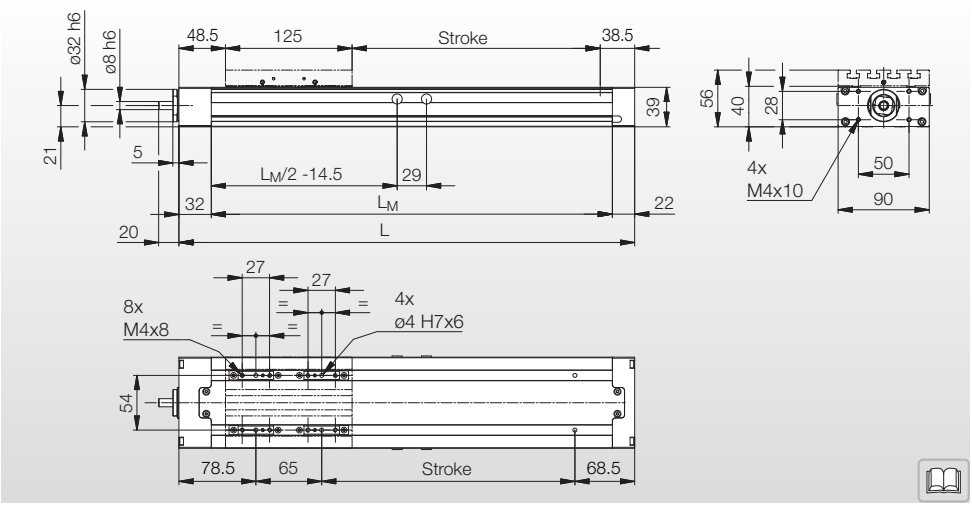

Nominal size	Dimensions				
Designation	L (without buffer) [mm]	L_M [mm]	Spindle length [mm]	Length of protective ribbon [mm]	Weight [kg]
KE1.4…AR…P	Stroke + 212	L – 54	L + 10	2 x stroke + 310	2.43 kg + 0.410 kg/100 mm stroke

9.4.1 Parts list for exploded view

→ □ 9.4.2

Assembly of attachments according to the corresponding chapters → 11 / 12 / 13 / 14
LINE TECH recommends ordering the superordinate assemblies
Ordering spare parts and accessories requires the information from the nameplate → 7.2

Position	Designation	Position	Designation
1	Base profile	6	Complete covers
2	Sealing plug	7	Front carriage
3	Linear rail	8	Rear carriage
4	Screw on linear rail	9	-
5	End plate with ball screw	10	End plate opposite the drive side
5.1	Complete ball screw	11	Cover profile
5.1.1	Angular contact ball bearings	12	Carriage connection
5.1.2	Lock nut	13	-
5.1.3	Needle bearing	14	-

9.4.2 Setup and assembly of the Compact Unit (exploded view)

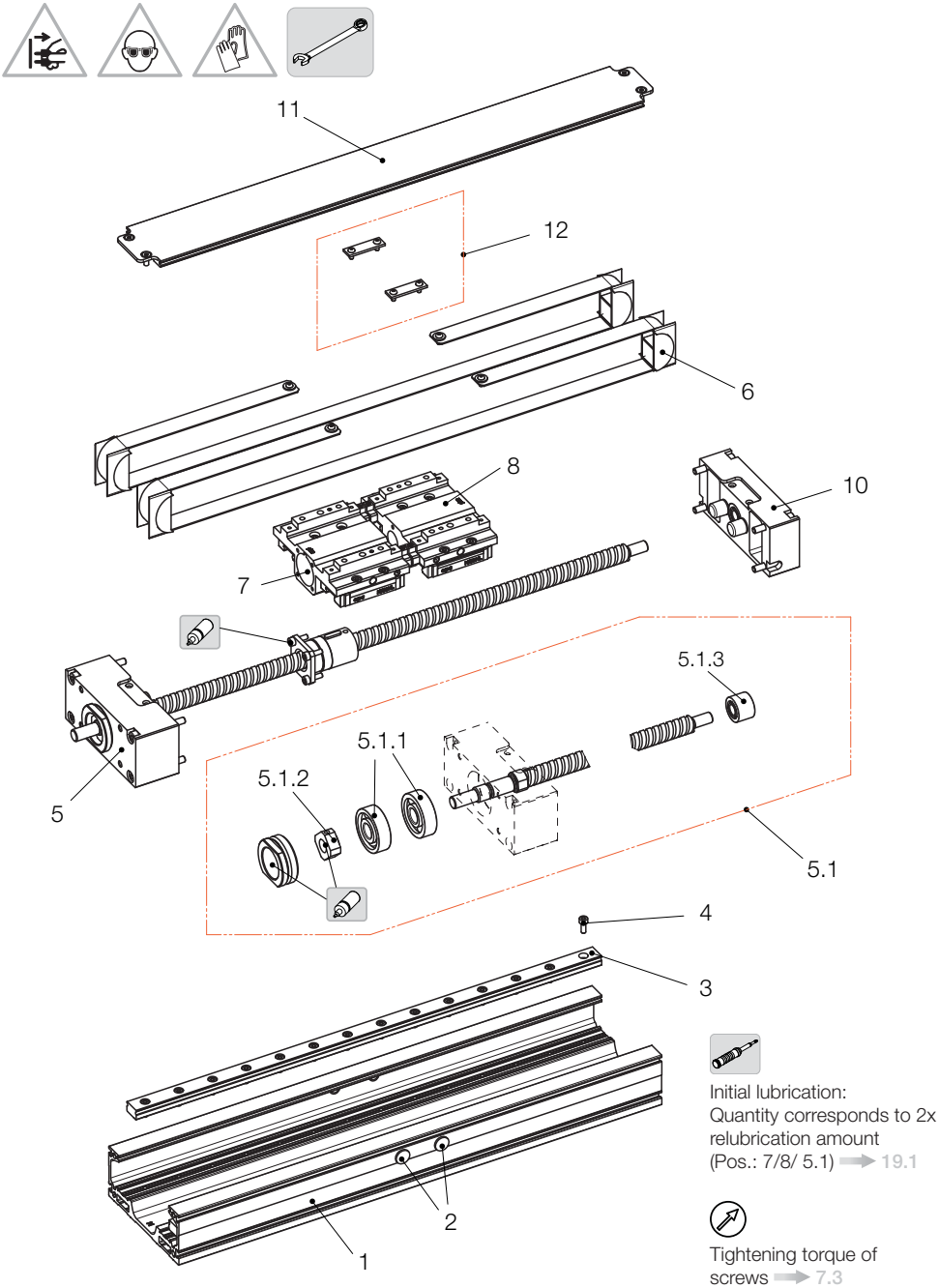

9.5 Dimensions KE2.2...AR...N

1 carriage, ball screw and cover, without buffer

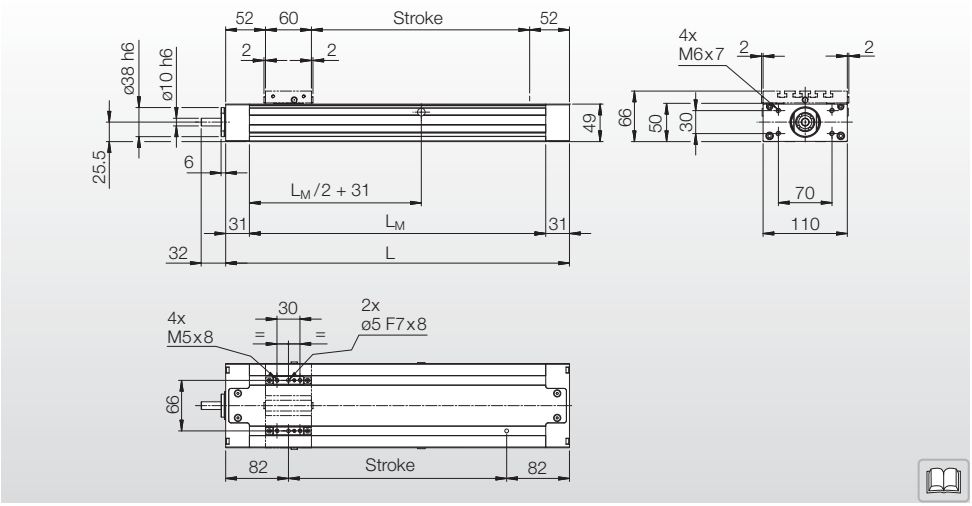

Nominal size	Dimensions				
Designation	L (without buffer) [mm]	L_M [mm]	Spindle length [mm]	Length of protective ribbon [mm]	Weight [kg]
KE2.2...AR...N	Stroke + 164	L – 62	L + 12	2 x Stroke + 294	1.90 kg + 0.852 kg/100 mm stroke

9.5.1 Parts list for exploded view

→ □ 9.5.2

Assembly of attachments according to the corresponding chapters → 11 / 12 / 13 / 14
LINE TECH recommends ordering the superordinate assemblies
Ordering spare parts and accessories requires the information from the nameplate → 7.2

Position	Designation	Position	Designation
1	Base profile	5.1.4	Inner ring
2	Sealing plug	5.1.5	Needle bearing
3	Linear rail	6	Complete covers
4	Screw on linear rail	7	Carriage
5	End plate with ball screw	8	-
5.1	Complete ball screw	9	-
5.1.1	Angular contact ball bearings	10	End plate opposite the drive side
5.1.2	Lock nut	11	Cover profile
5.1.3	Spacer ring	12	-

9.5.2 Setup and assembly of the Compact Unit (exploded view)

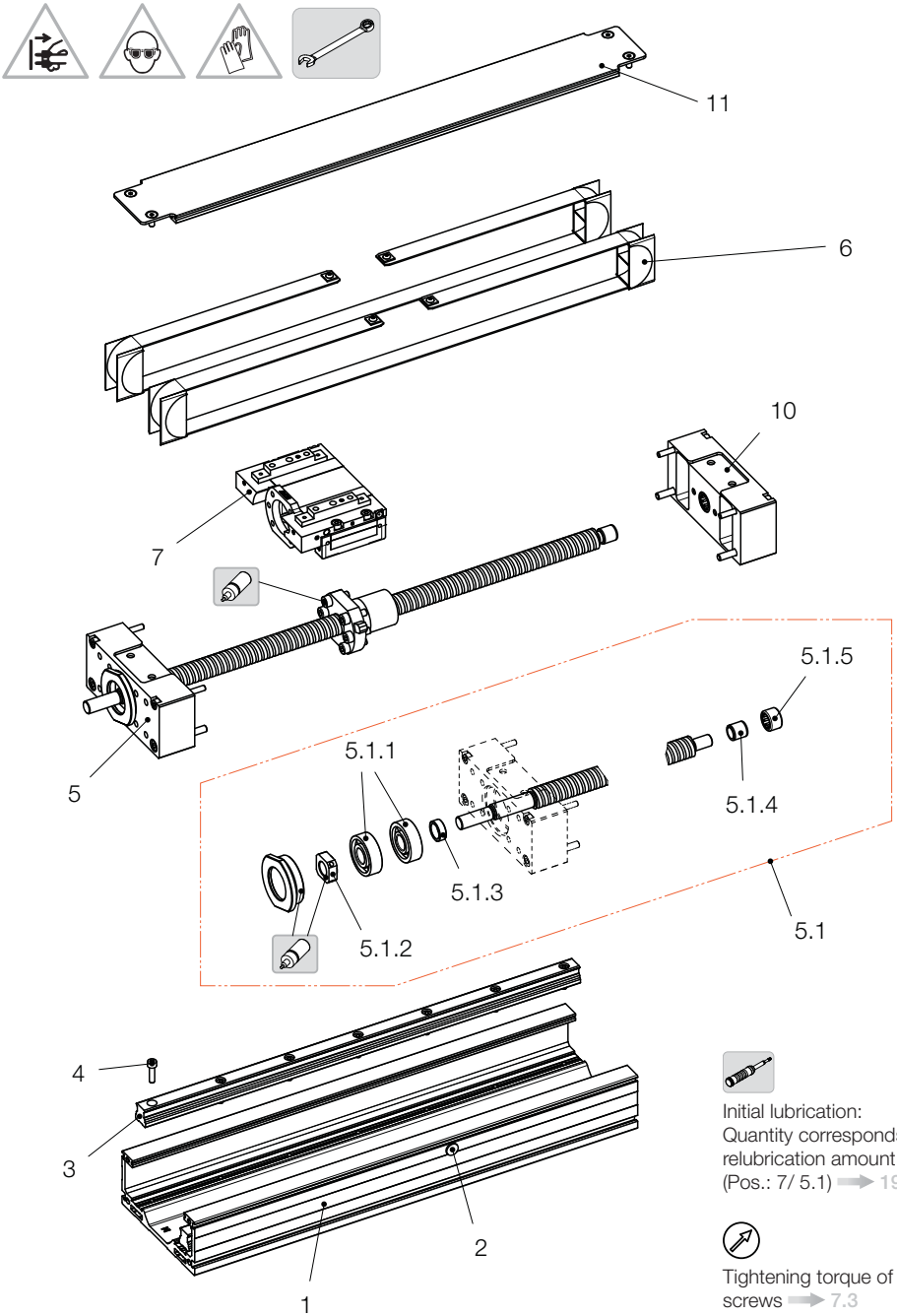

Initial lubrication:
Quantity corresponds to 2x relubrication amount (Pos.: 7/ 5.1) → 19.1

Tightening torque of screws → 7.3

9.6 Dimensions KE2.2...AR...P

1 carriage, ball screw and cover, with buffer

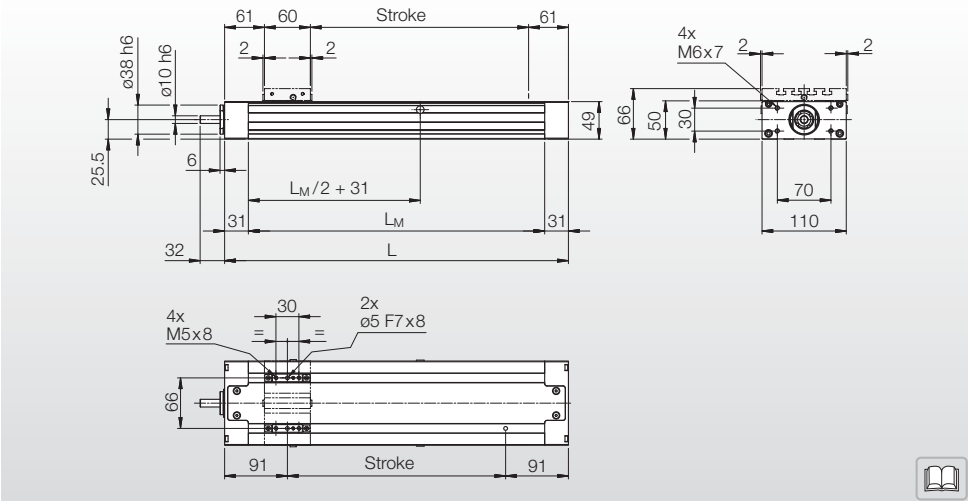

Nominal size	Dimensions				
Designation	L (without buffer) [mm]	L_M [mm]	Spindle length [mm]	Length of protective ribbon [mm]	Weight [kg]
KE2.2...AR...P	Stroke + 182	L – 62	L + 12	2 x Stroke + 330	2.13 kg + 0.852 kg/100 mm stroke

9.6.1 Parts list for exploded view

→ □ 9.6.2

Assembly of attachments according to the corresponding chapters → 11 / 12 / 13 / 14
LINE TECH recommends ordering the superordinate assemblies
Ordering spare parts and accessories requires the information from the nameplate → 7.2

Position	Designation	Position	Designation
1	Base profile	5.1.4	Inner ring
2	Sealing plug	5.1.5	Needle bearing
3	Linear rail	6	Complete covers
4	Screw on linear rail	7	Carriage
5	End plate with ball screw	8	-
5.1	Complete ball screw	9	-
5.1.1	Angular contact ball bearings	10	End plate opposite the drive side
5.1.2	Lock nut	11	Cover profile
5.1.3	Spacer ring	12	-

9.6.2 Setup and assembly of the Compact Unit (exploded view)

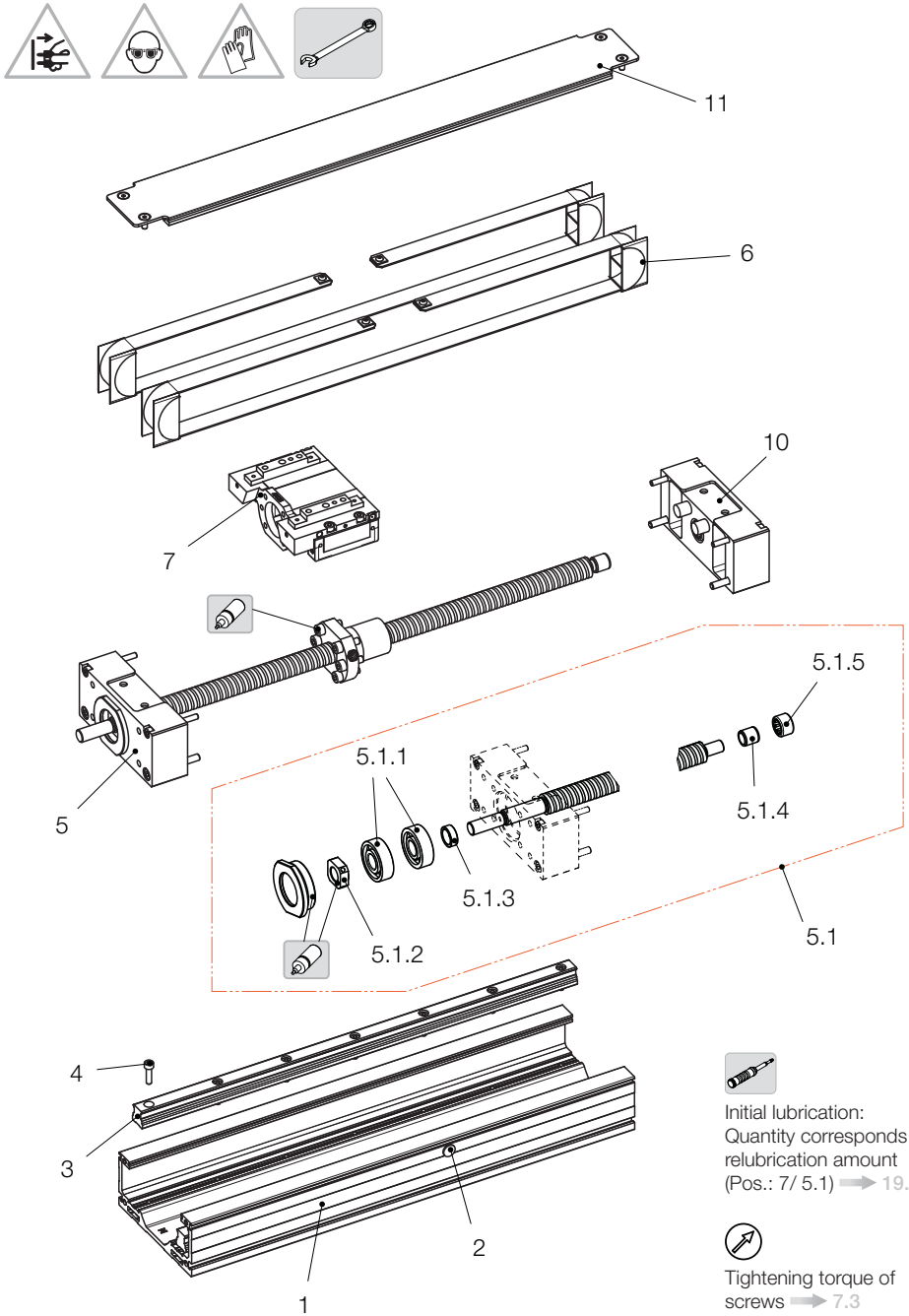

Initial lubrication:
Quantity corresponds to 2x relubrication amount (Pos.: 7/ 5.1) → 19.1

Tightening torque of screws → 7.3

9.7 Dimensions KE2.4...AR...N

2 carriage, ball screw and cover, without buffer

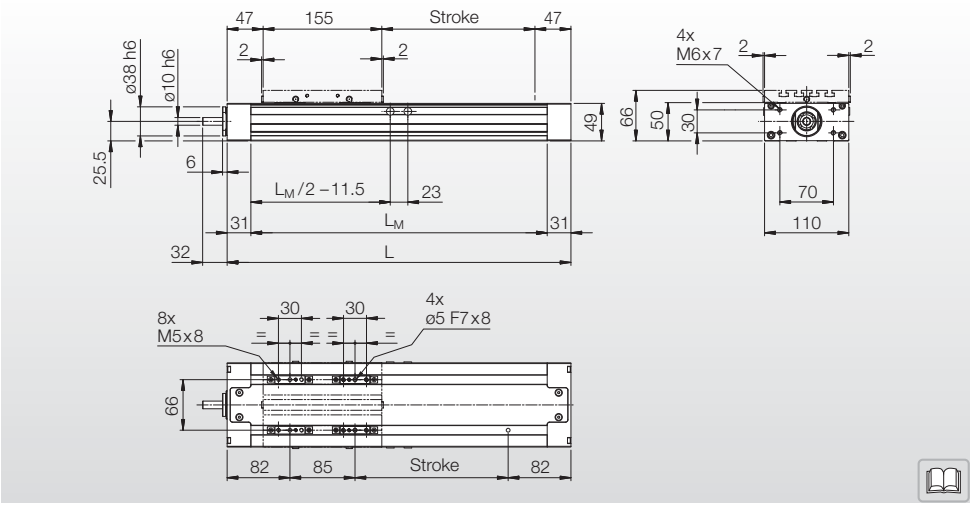

Nominal size	Dimensions				
Designation	L (without buffer) [mm]	L_M [mm]	Spindle length [mm]	Length of protective ribbon [mm]	Weight [kg]
KE2.4...AR...N	Stroke + 249	L – 62	L + 12	2 x Stroke + 379	3.25 kg + 0.852 kg/100 mm stroke

9.7.1 Parts list for exploded view

→ 9.7.2

Assembly of attachments according to the corresponding chapters → 11 / 12 / 13 / 14
LINE TECH recommends ordering the superordinate assemblies
Ordering spare parts and accessories requires the information from the nameplate → 7.2

Position	Designation	Position	Designation
1	Base profile	5.1.4	Inner ring
2	Sealing plug	5.1.5	Needle bearing
3	Linear rail	6	Complete covers
4	Screw on linear rail	7	Carriage
5	End plate with ball screw	8	Screw plug
5.1	Complete ball screw	9	-
5.1.1	Angular contact ball bearings	10	End plate opposite the drive side
5.1.2	Lock nut	11	Cover profile
5.1.3	Spacer ring	12	Carriage connection

9.7.2 Setup and assembly of the Compact Unit (exploded view)

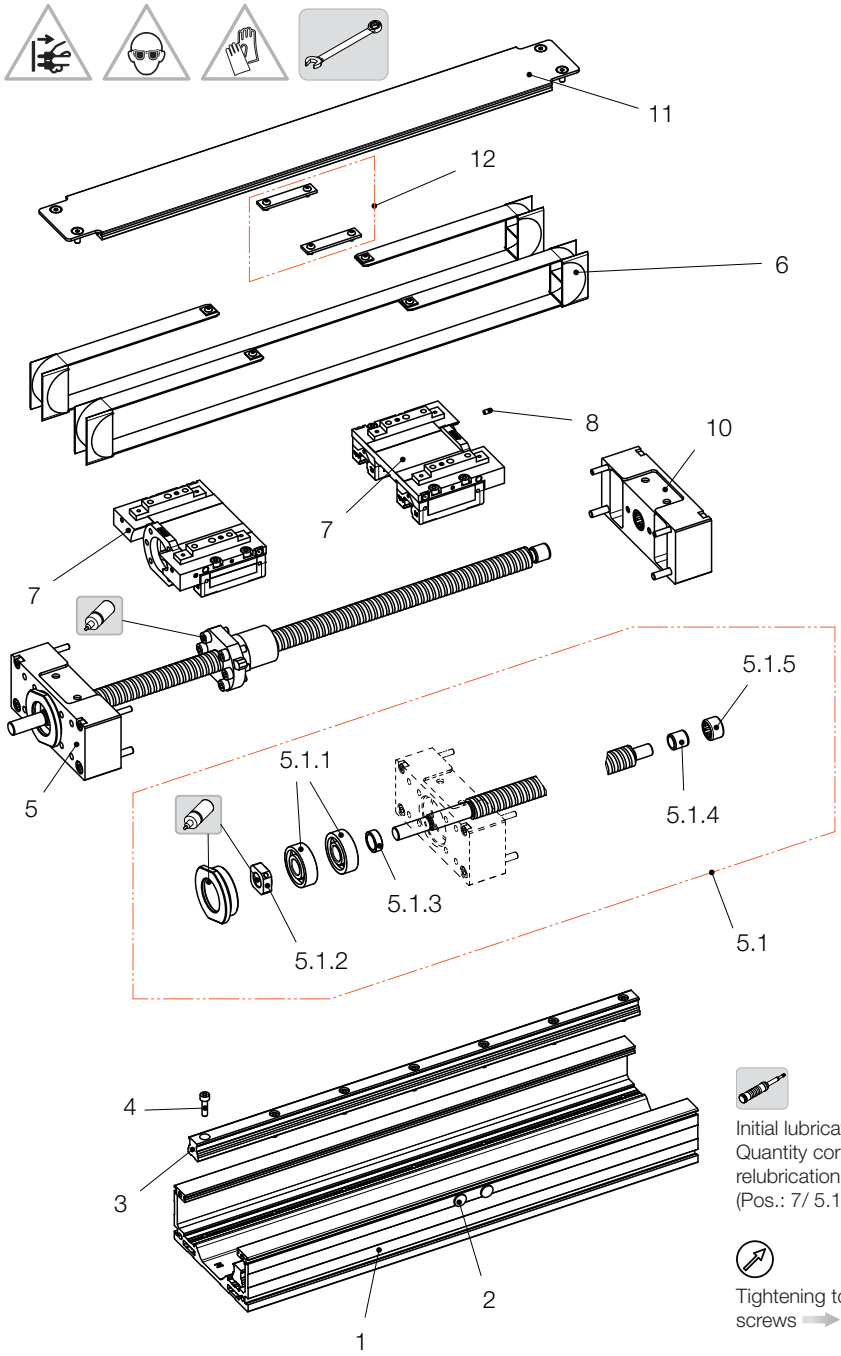

Initial lubrication:
Quantity corresponds to 2x relubrication amount (Pos.: 7/ 5.1) → 19.1

Tightening torque of screws → 7.3

9.8 Dimensions KE2.4...AR...P

2 carriage, ball screw and cover, with buffer

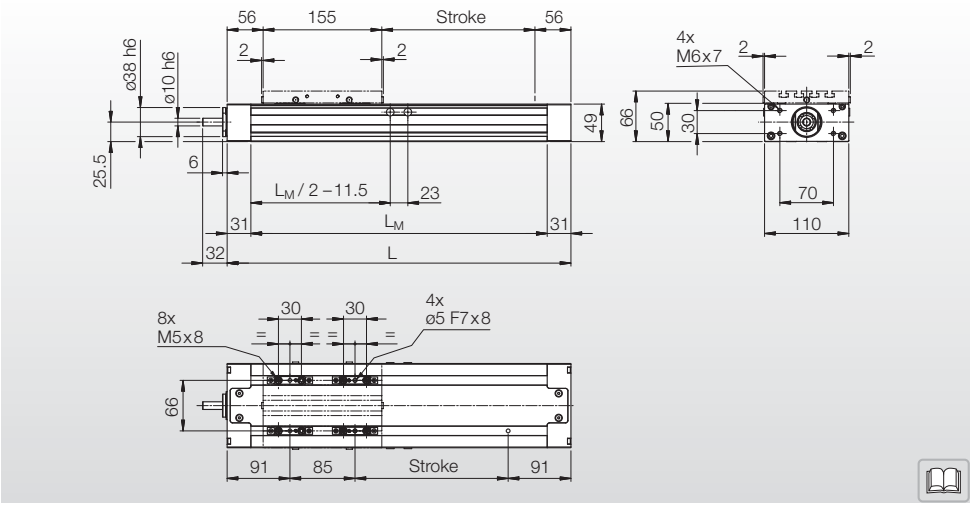

Nominal size	Dimensions				
Designation	L (without buffer) [mm]	L_M [mm]	Spindle length [mm]	Length of protective ribbon [mm]	Weight [kg]
KE2.4...AR...P	Stroke + 267	L – 62	L + 12	2 x Stroke + 415	3.48 kg + 0.852 kg/100 mm stroke

9.8.1 Parts list for exploded view

→ □ 9.8.2

Assembly of attachments according to the corresponding chapters → 11 / 12 / 13 / 14
LINE TECH recommends ordering the superordinate assemblies
Ordering spare parts and accessories requires the information from the nameplate → 7.2

Position	Designation	Position	Designation
1	Base profile	5.1.4	Inner ring
2	Sealing plug	5.1.5	Needle bearing
3	Linear rail	6	Complete covers
4	Screw on linear rail	7	Carriage
5	End plate with ball screw	8	Screw plug
5.1	Complete ball screw	9	Stop pin
5.1.1	Angular contact ball bearings	10	End plate opposite the drive side
5.1.2	Lock nut	11	Cover profile
5.1.3	Spacer ring	12	Carriage connection

9.8.2 Setup and assembly of the Compact Unit (exploded view)

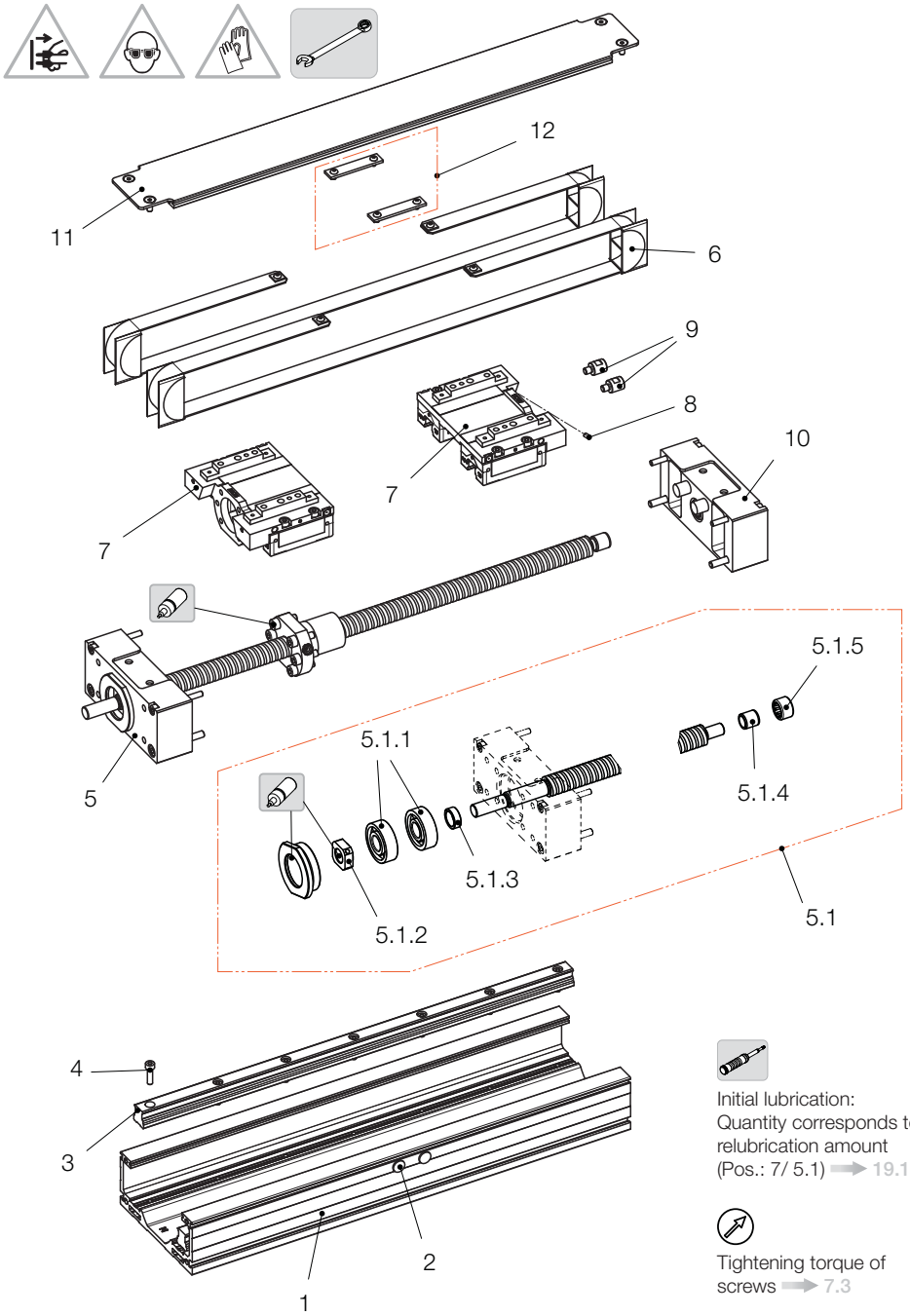

Initial lubrication:
Quantity corresponds to 2x relubrication amount (Pos.: 7/ 5.1) → 19.1

Tightening torque of screws → 7.3

9.9 Dimensions KE3.2...AR...N

1 carriage, ball screw and cover, without buffer

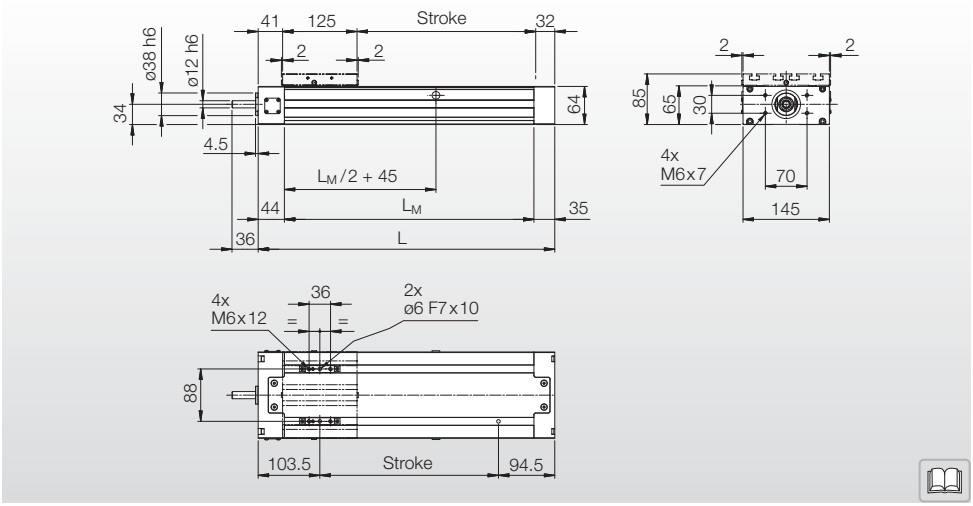

Nominal size	Dimensions				
Designation	L (without buffer) [mm]	L_M [mm]	Spindle length [mm]	Length of protective ribbon [mm]	Weight [kg]
KE3.2...AR...N	Stroke + 198	L – 79	L + 17	2 x Stroke + 354	5.40 kg + 1.232 kg/100 mm stroke

9.9.1 Parts list for exploded view

→ 9.9.2

Assembly of attachments according to the corresponding chapters → 11 / 12 / 13 / 14
LINE TECH recommends ordering the superordinate assemblies
Ordering spare parts and accessories requires the information from the nameplate → 7.2

Position	Designation	Position	Designation
1	Base profile	5.1.4	Inner ring
2	Sealing plug	5.1.5	Needle bearing
3	Linear rail	6	Complete covers
4	Screw on linear rail	7	Carriage
5	End plate with ball screw	8	-
5.1	Complete ball screw	9	-
5.1.1	Angular contact ball bearings	10	End plate opposite the drive side
5.1.2	Lock nut	11	Cover profile
5.1.3	Spacer ring	12	-

9.9.2 Setup and assembly of the Compact Unit (exploded view)

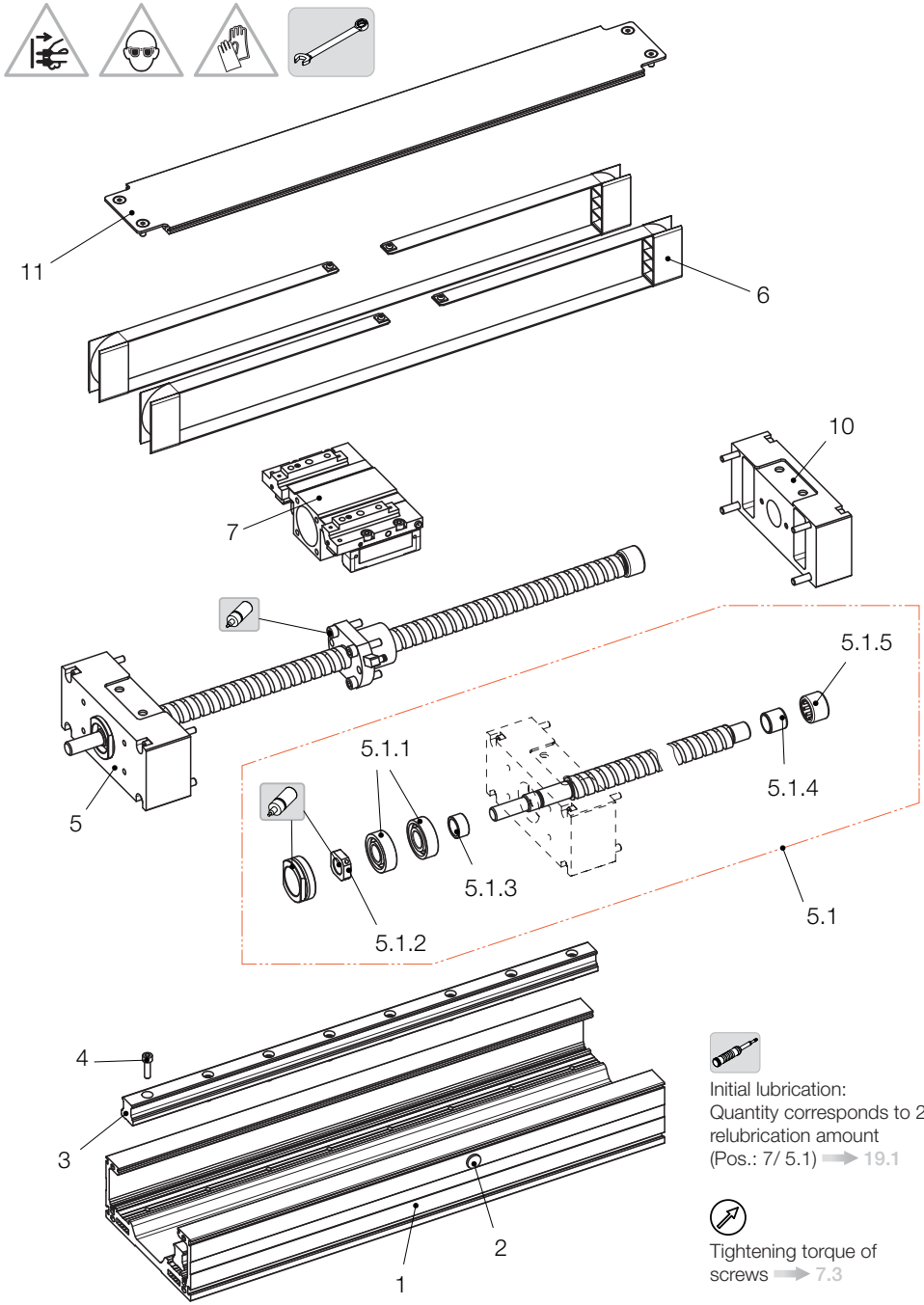

Initial lubrication:
Quantity corresponds to 2x relubrication amount (Pos.: 7/ 5.1) → 19.1

Tightening torque of screws → 7.3

9.10 Dimensions KE3.2...AR...P

1 carriage, ball screw and cover, with buffer

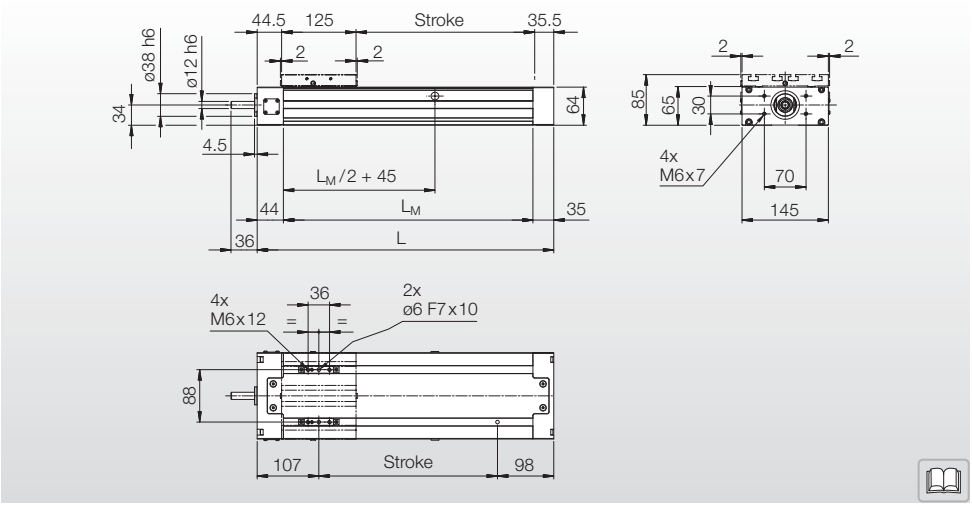

Nominal size	Dimensions				
Designation	L (without buffer) [mm]	L_M [mm]	Spindle length [mm]	Length of protective ribbon [mm]	Weight [kg]
KE3.2...AR...P	Stroke + 205	L – 79	L + 17	2 x Stroke + 415	5.49 kg + 1.232 kg/100 mm stroke

9.10.1 Parts list for exploded view

→ □ 9.10.2

Assembly of attachments according to the corresponding chapters → 11 / 12 / 13 / 14
LINE TECH recommends ordering the superordinate assemblies
Ordering spare parts and accessories requires the information from the nameplate → 7.2

Position	Designation	Position	Designation
1	Base profile	5.1.4	Inner ring
2	Sealing plug	5.1.5	Needle bearing
3	Linear rail	6	Complete covers
4	Screw on linear rail	7	Carriage
5	End plate with ball screw	8	-
5.1	Complete ball screw	9	-
5.1.1	Angular contact ball bearings	10	End plate opposite the drive side
5.1.2	Lock nut	11	Cover profile
5.1.3	Spacer ring	12	-

9.10.2 Setup and assembly of the Compact Unit (exploded view)

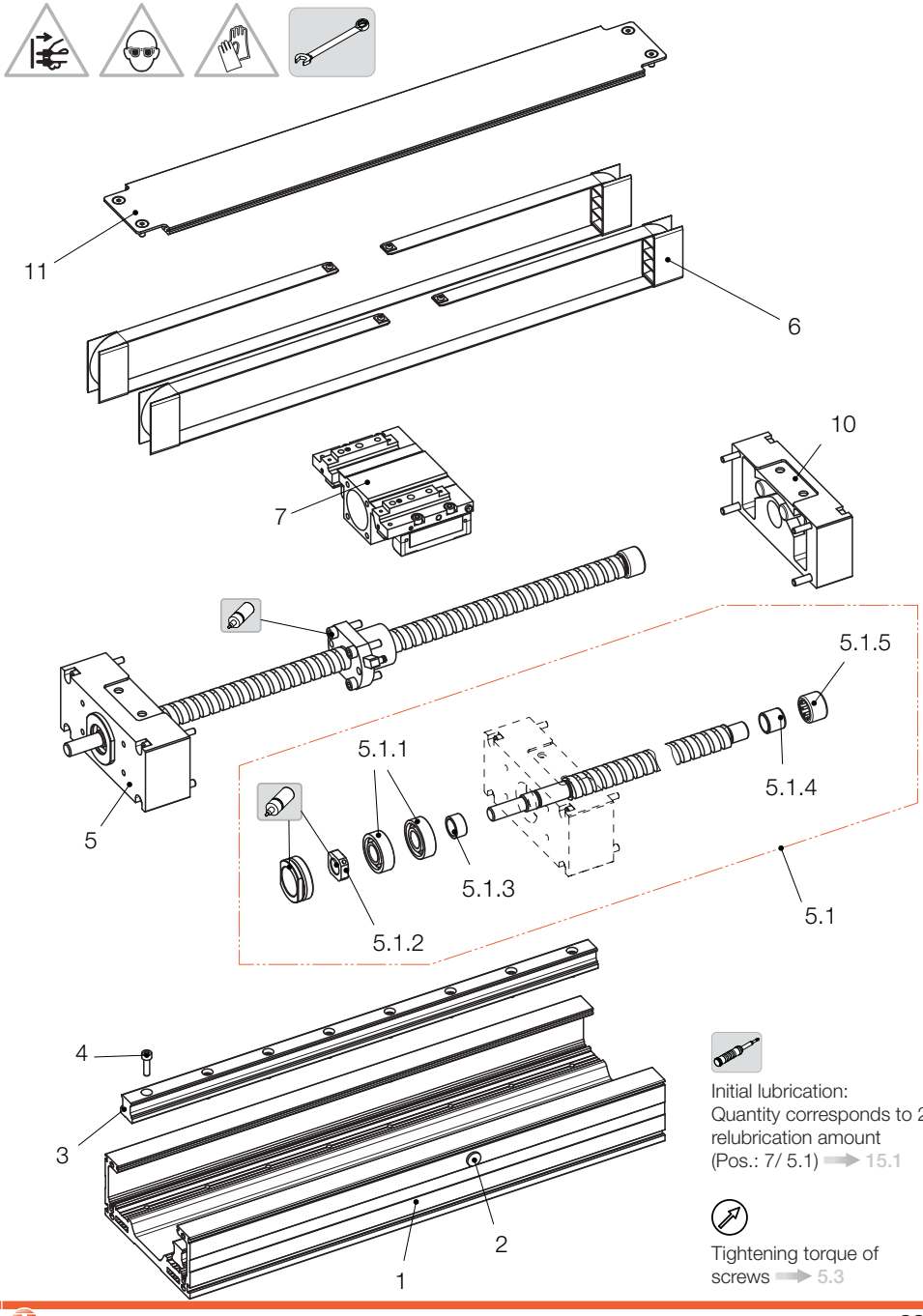

Initial lubrication:
Quantity corresponds to 2x relubrication amount (Pos.: 7/ 5.1) → 15.1

Tightening torque of screws → 5.3

9.11 Dimensions KE3.4...AR...N

2 carriage, ball screw and cover, without buffer

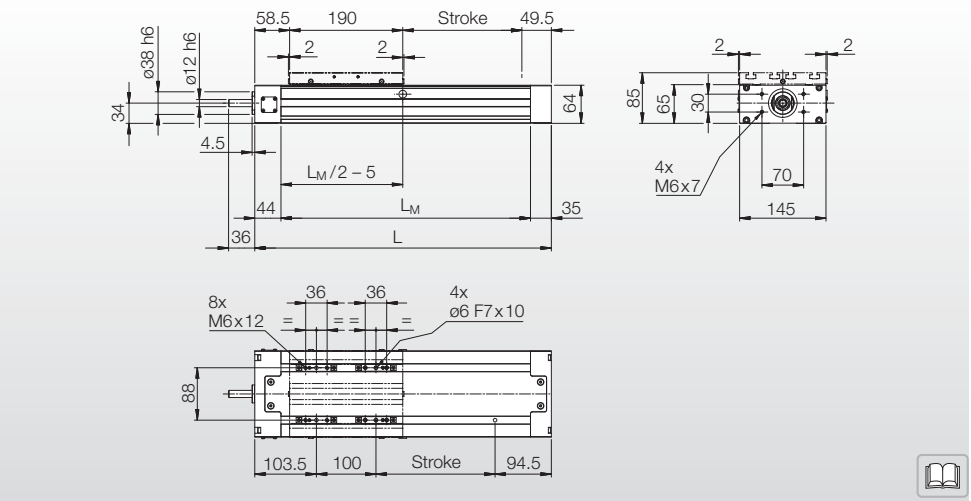

Nominal size	Dimensions				
Designation	L (without buffer) [mm]	L_M [mm]	Spindle length [mm]	Length of protective ribbon [mm]	Weight [kg]
KE3.4...AR...N	Stroke + 298	L – 79	L + 17	2 x Stroke + 454	7.62 kg + 1.232 kg/100 mm stroke

9.11.1 Parts list for exploded view

→ □ 9.11.2

Assembly of attachments according to the corresponding chapters → 11 / 12 / 13 / 14
LINE TECH recommends ordering the superordinate assemblies
Ordering spare parts and accessories requires the information from the nameplate → 7.2

Position	Designation	Position	Designation
1	Base profile	5.1.4	Inner ring
2	Sealing plug	5.1.5	Needle bearing
3	Linear rail	6	Complete covers
4	Screw on linear rail	7	Carriage
5	End plate with ball screw	8	Screw plug
5.1	Complete ball screw	9	-
5.1.1	Angular contact ball bearings	10	End plate opposite the drive side
5.1.2	Lock nut	11	Cover profile
5.1.3	Spacer ring	12	Carriage connection

9.11.2 Setup and assembly of the Compact Unit (exploded view)

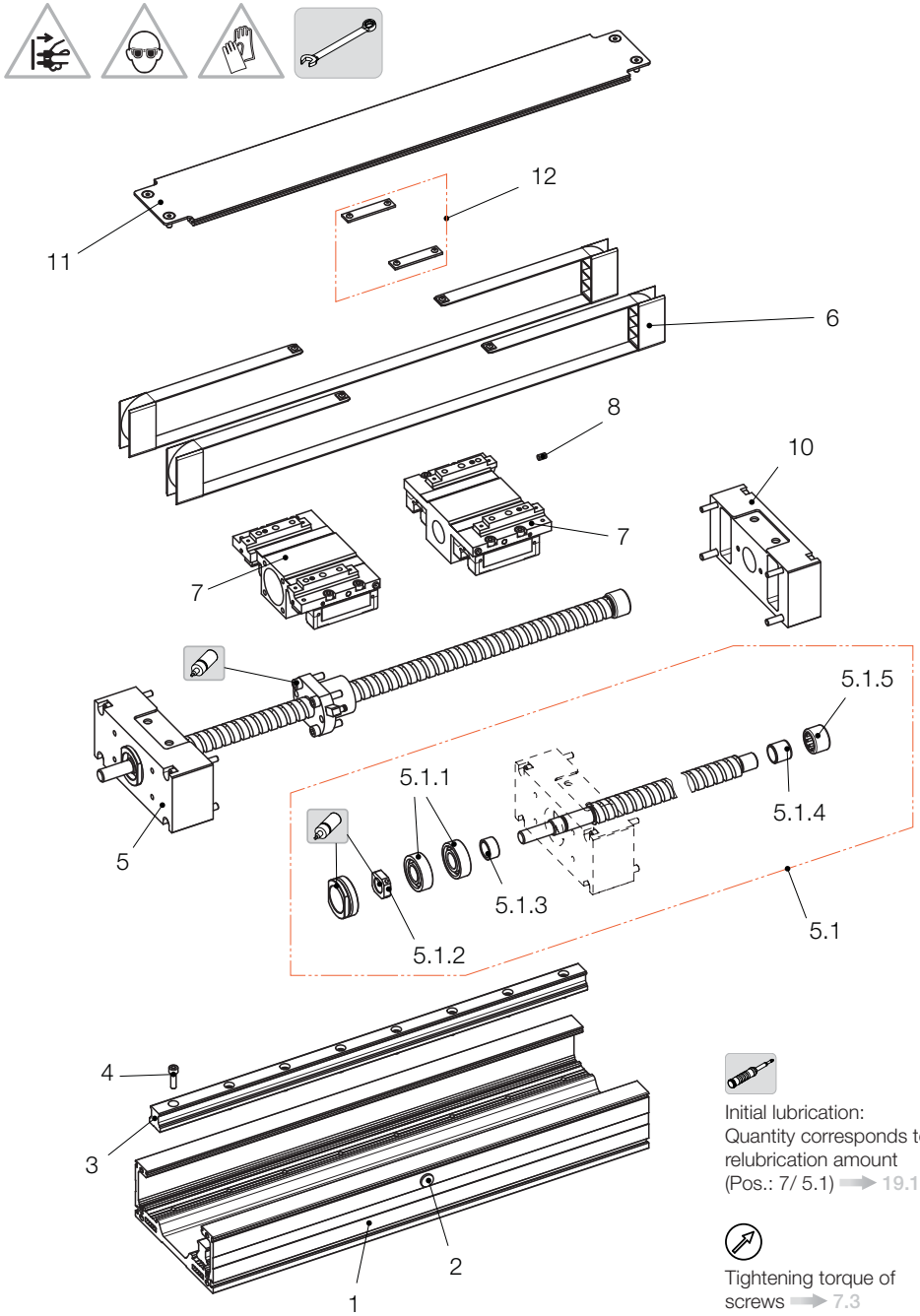

Initial lubrication:
Quantity corresponds to 2x relubrication amount (Pos.: 7/ 5.1) → 19.1

Tightening torque of screws → 7.3

9.12 Dimensions KE3.4...AR...P

2 carriage, ball screw and cover, with buffer

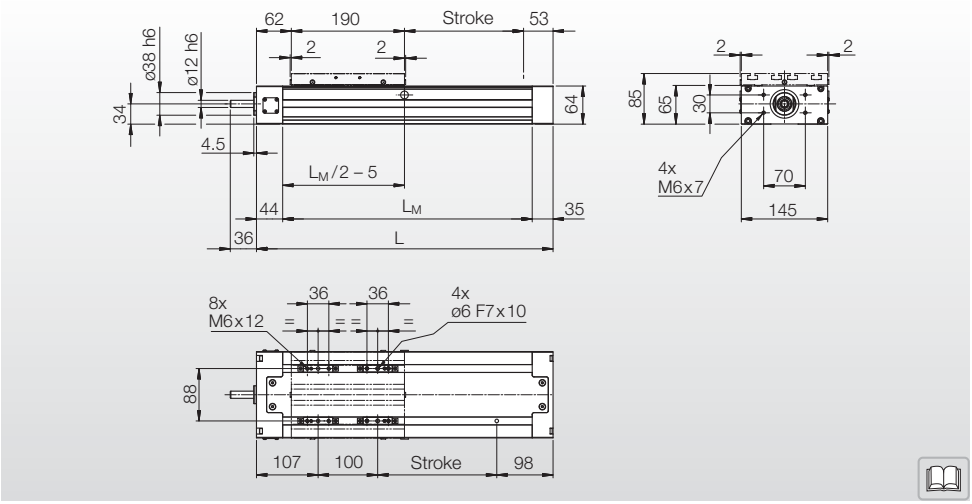

Nominal size	Dimensions				
Designation	L (without buffer) [mm]	L_M [mm]	Spindle length [mm]	Length of protective ribbon [mm]	Weight [kg]
KE3.4...AR...P	Stroke + 305	L – 79	L + 17	2 x Stroke + 468	7.71 kg + 1.232 kg/100 mm stroke

9.12.1 Parts list for exploded view

→ □ 9.12.2

Assembly of attachments according to the corresponding chapters → 11 / 12 / 13 / 14
LINE TECH recommends ordering the superordinate assemblies
Ordering spare parts and accessories requires the information from the nameplate → 7.2

Position	Designation	Position	Designation
1	Base profile	5.1.4	Inner ring
2	Sealing plug	5.1.5	Needle bearing
3	Linear rail	6	Complete covers
4	Screw on linear rail	7	Carriage
5	End plate with ball screw	8	Screw plug
5.1	Complete ball screw	9	Stop pin
5.1.1	Angular contact ball bearings	10	End plate opposite the drive side
5.1.2	Lock nut	11	Cover profile
5.1.3	Spacer ring	12	Carriage connection

9.12.2 Setup and assembly of the Compact Unit (exploded view)

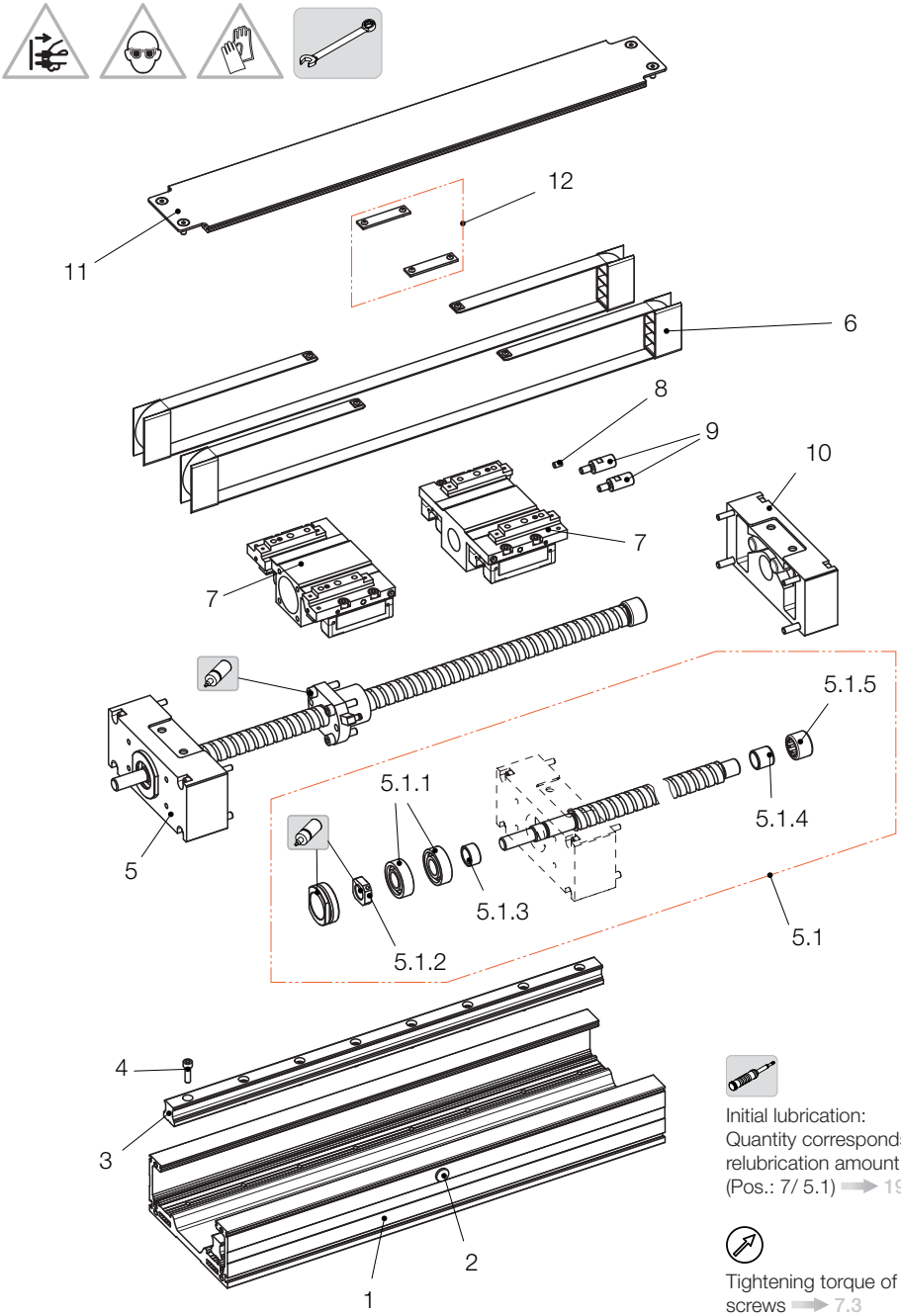

Initial lubrication:
Quantity corresponds to 2x relubrication amount (Pos.: 7/ 5.1) → 19.1

Tightening torque of screws → 7.3

10. Deflection of Compact Units (KE)

10.1 Permissible deflection

Compact modules may be assembled self-supporting. However, the deflection must be noted in the process, as this limits the possible load.

If the maximum permissible deflection is exceeded, the Compact Units must be additionally supported.

The maximum permissible deflection is limited by the maximum deflection angle of 5'. This value being exceeded will have an impact on the unit's life-cycle.

If increased demands are made on system accuracy we recommend supporting the Compact Units along their entire length.

The following diagrams apply for:
– fixed clamping
  (40–50 mm per side)
– 3–4 screws per side
– fixed substructure

KE1... horizontal

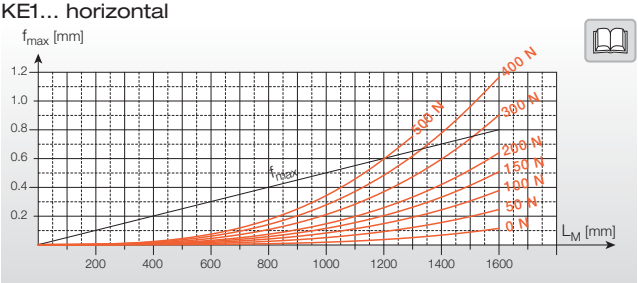

KE1... vertical

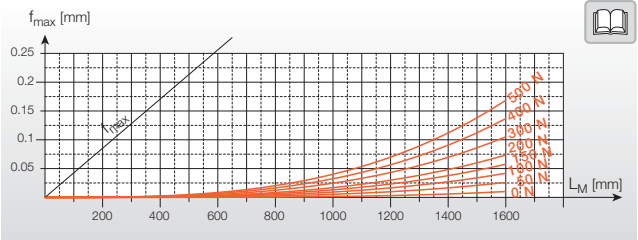

KE2... horizontal

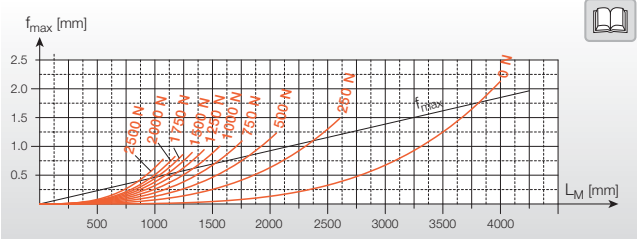

KE2... vertical

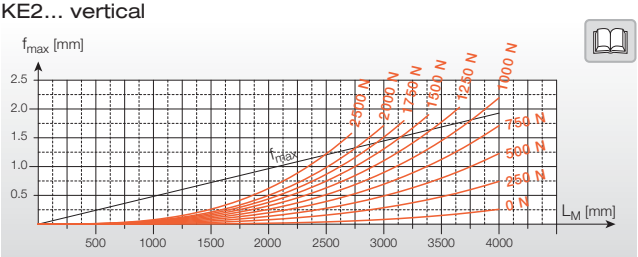

Installation position:
– horizontal

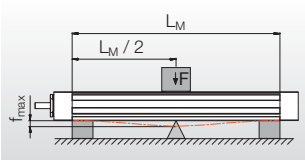

Installation position:
– vertical

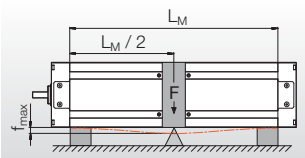

KE3... horizontal

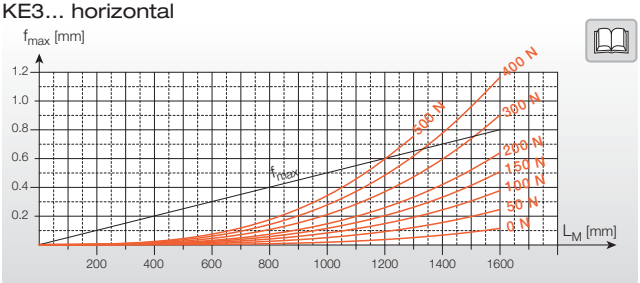

KE3... vertical

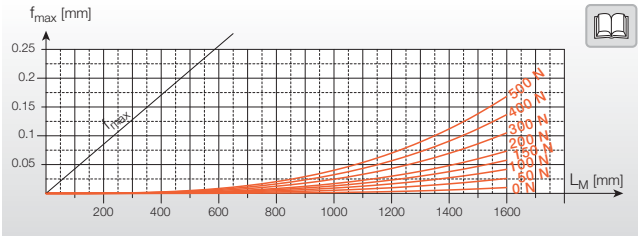

Installation position:
– horizontal

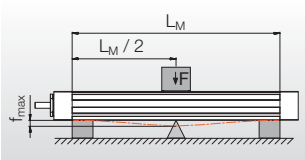

Installation position:
– vertical

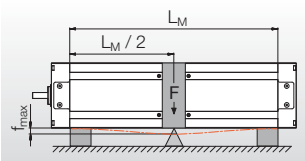

11. Fastening accessories

11.1 Securing the Compact Unit with clamps

The aluminium base profile is the main supporting body of the unit. This must be supported across the entire length if possible. The end plates may not be used as supporting elements.

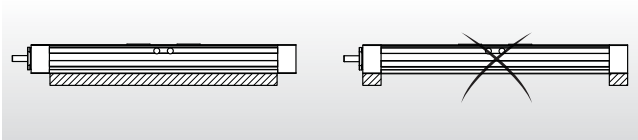

The Compact Units are secured with clamps as a standard. These are to be evenly distributed on both sides. The following rule must be observed for each side:

- 4 clamps per metre (type I)
- 3 clamps per metre (type II)

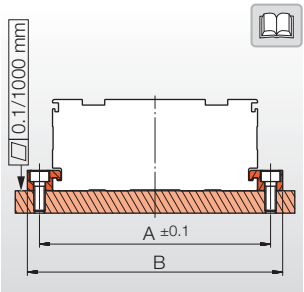

Nominal size	Dimensions [mm]	
	A	B
KE1...	102	112
KE2...	126	140
KE3...	161	175

The screws are to be secured with Loctite. The recommended tightening torques M_A can be found in the table → 7.3

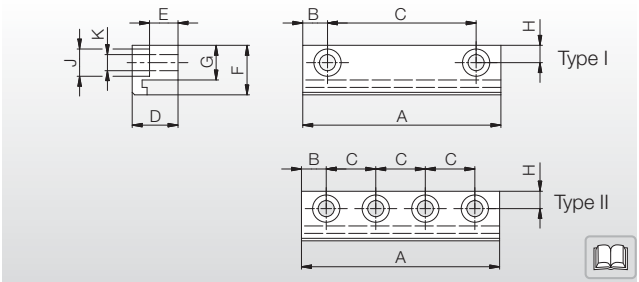

Nominal size	Dimensions [mm]											Item no.
	Type	A	B	C	D	E	F	G	H	J	K	
KE1...	I	35	7.5	20	7.6	2.6	14.5	11	5	ø8	ø4.5	P-55013/1
	II	80	10	20								P-55021/1
KE2/3...	I	60	10	40	10.5	4.5	19.5	15	7	ø11	ø6.5	P-54179/1
	II	80		20								P-54181/1

Notes

12. Limit switch

12.1 Attachment / assembly / plug connection

Limit switch preparation

Limit switches are supplied as standard without connector box with 2 metre long cables (order code N); a connector box with completed cabling is available as an option (order code S).

Limit switch mating connectors and cables are not included in the delivery, but can be ordered ready-made from LINE TECH AG.

Standard: without connector box (N), with connector cable (L = 2m)

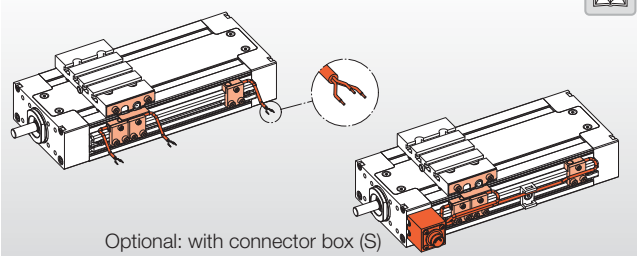

12.2 Limit switches / reference switch mounting overview

Limit switch

The limit switches are used in conjunction with a control unit to limit the stroke (prevent overrunning of the carriage) and to define the reference position.

At the factory the plus and minus limit switches are preset to a nominal stroke of 0 to +5 mm

LINE TECH employs the following standard inductive limit switches:
- PNP normally closed
Supply: 10…30 V DC
Current consumption off-load: < 10 mA
Load mx. 200 mA

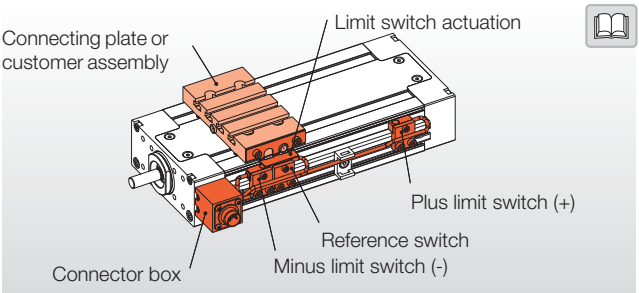

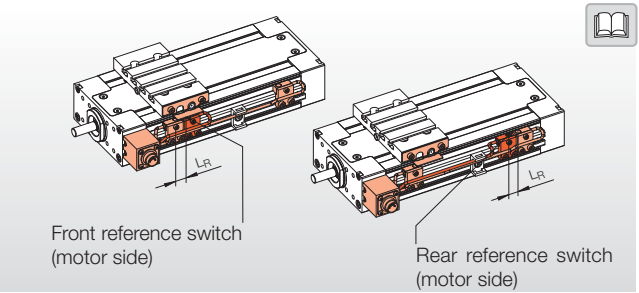

Fitting position of limit switches

The installation position of the limit switches. is evident from the following images. The reference point can be assigned to the positive (+) or the negative limit switch (-).

Special applications often require a separate reference point switch to be mounted between the positive and negative limit switches. The limit switch closest to the motor mounting (limit switch controller interface) is known as the forward limit switch.

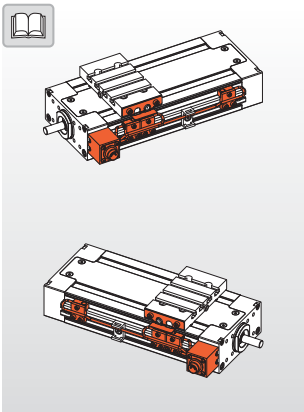

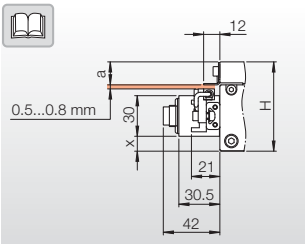

Size	Dimensions [mm]		
	x	a	H
KE1	3	17.5	56
KE2	13	17	66
KE3	32.5	17	85

The plug pin assignment when using a connector box is shown in the diagram below.

The individual pins are assigned as follows:
Pin 1 = negative (-) direction (load)
Pin 2 = 0 V (GND)
Pin 3 = Positive (+) direction (load)
Pin 4 = +10…30 V DC
Pin 5 = Reference (load)

Colour code key for the diagrams below:
Load = black
+V DC = brown
0 V (GND) = blue

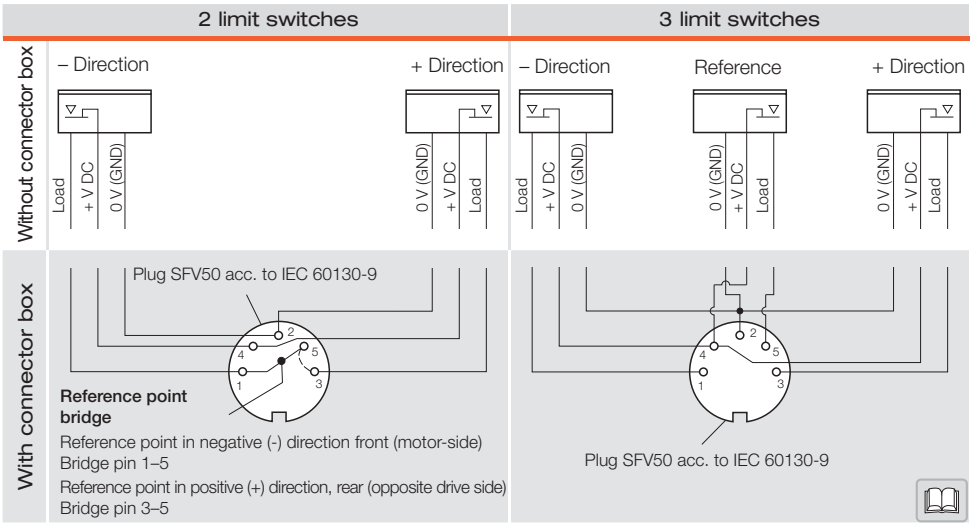

12.2.1 Limit switch mounting (exploded view)

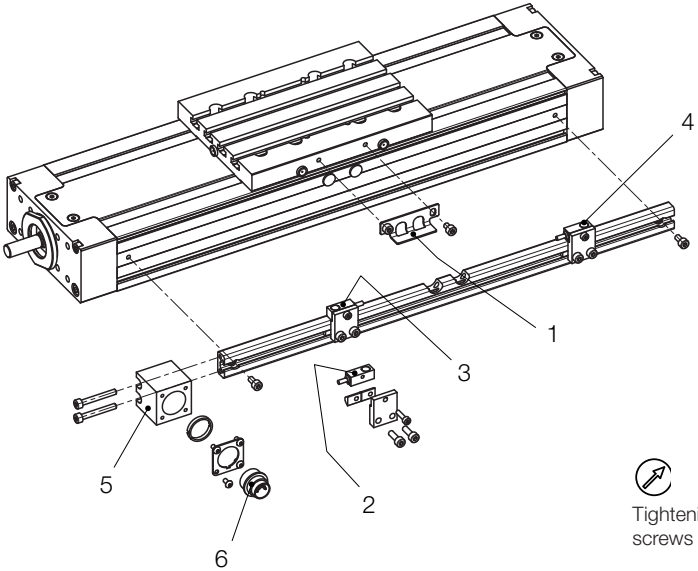

Tightening torque of screws → 7.3

12.2.2 Parts list for exploded view

→ □ 12.2.1

Ordering spare parts and accessories requires the information from the nameplate → 7.2

Position	Designation	Position	Designation
1	Limit switch actuation	5	Connector box
2	Minus limit switch (-)	6	Plug (including nut)
3	Reference switch	7	-
4	Plus limit switch (+)	8	-

13. Motor mounting

13.1 Straight, with ball screw

Note the motor manufacturer's operating instructions prior to mounting a motor

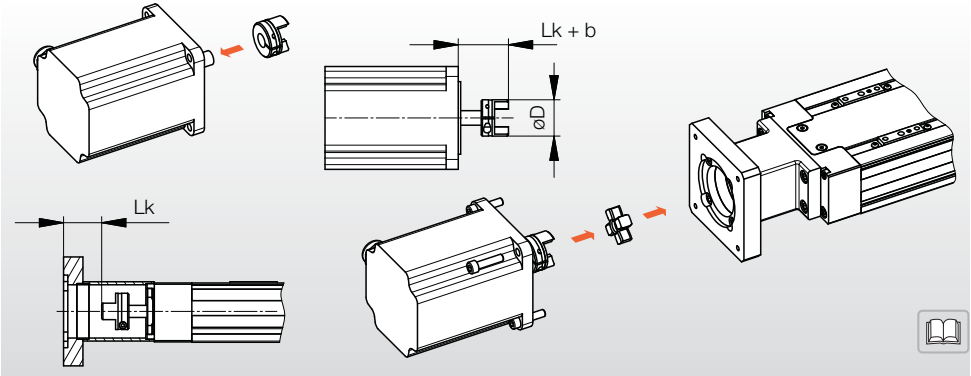

1) Measure the spacing of the Lk on the unit
2) Attach the clamping hub to the motor mounting in the spacing Lk + b. Tightening torque of the clamping screw → 13.1.2
3) Attach the preassembled motor with gear ring to the unit

13.1.1 Motor attachments and parts list, straight with ball screw

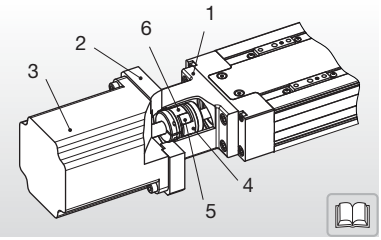

Position	Designation
1	Intermediate flange
2	Motor plate
3	Motor
4	"KE" clamping hub
5	Sprocket
6	"Motor" clamping hub

13.1.2 Tightening torque of the clamping screws

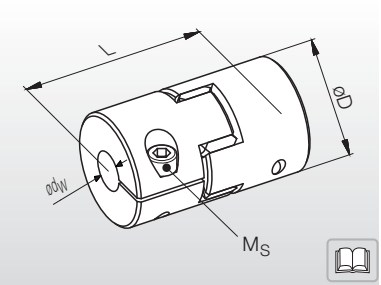

Tightening torque of the clamping screws

Size	Dimensions [mm]				Tightening torque of the clamping screw [Nm]		Drive torque [Nm]	
	L	øD	b	ød	Type	M_S	T_N	T_{max}
14	35	30	10	≤16	ISO 4762	1.34	6.3	25
19	66	40	12	≤20	ISO 4762	10.10	17.0	34
19	66	40	12	≤20	ISO 7380	7.20	17.0	34
24	78	55	14	≤28	ISO 4762	10.10	40.0	120

Notes

13.2 Lateral, with ball screw

Note the motor manufacturer's operating instructions prior to mounting a motor

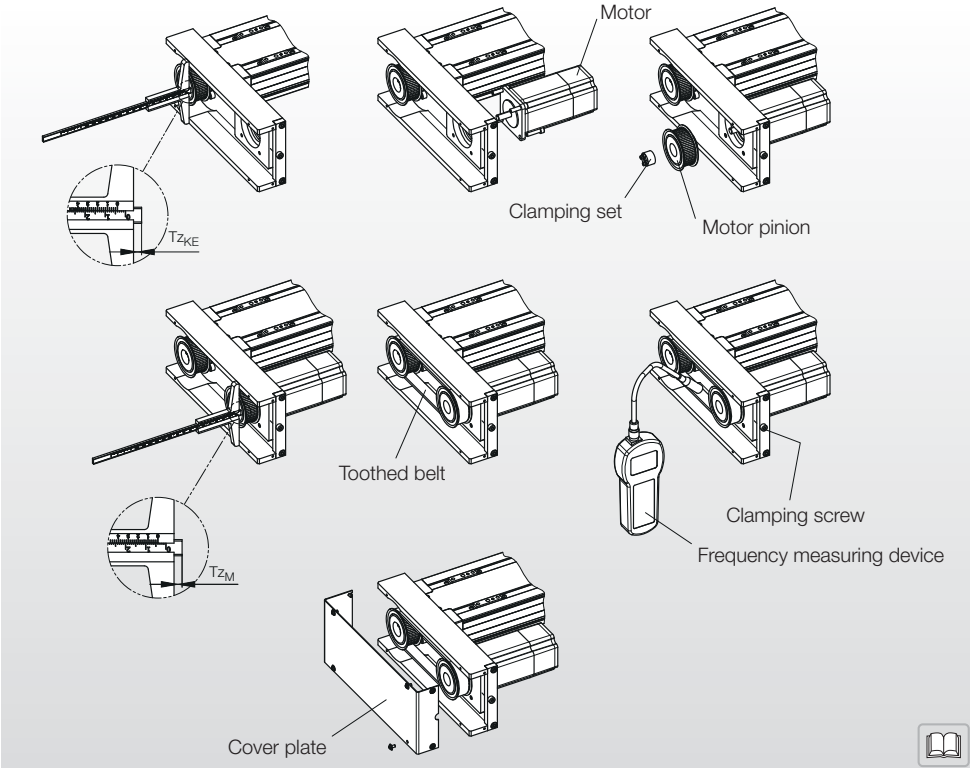

1) Measure the mounting depth of the mounted pinion Tz_{KE} at the unit.

2) Mount the motor on the belt drive housing with the corresponding screws.
   Ensure that the screws are tightened so that the motor and the motor plate can still be moved easily.

3) Mount the pinion on the motor side using a clamping set (tightening torques of the clamping screws → 13.2.1) in the same mounting depth ($Tz_{KE} = Tz_M$).

4) Insert the toothed belt and tighten using the clamping screw.
   The toothed belt tension is checked using a frequency measuring device. The adjustment frequency "f" can be determined according to the calculation → 13.3.
   Please also note the operating instructions of the frequency measuring device used.

5) Tighten the screws of the motor mounting according to the tightening torques → 7.3 .

6) Mount the cover plate.

13.2.1 Tightening torque of the clamping screws

Tightening torque of the clamping screws		
Motor shaft $ød_W$ [mm]	Type ISO 4762	Tightening torque M_S [Nm]
ø5...ø12	M2.5 x 10	1.20
ø14, ø15	M3 x 16	2.10
ø16...ø19	M4 x 20	4.90
ø20, ø22	M5 x 20	10.00
ø24...ø32	M6 x 24	17.00

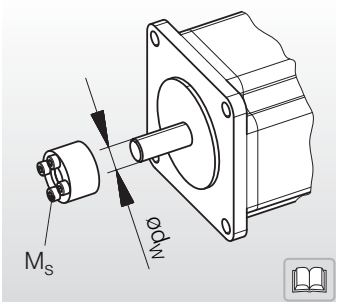

13.2.2 Motor attachments and parts list, lateral with ball screw

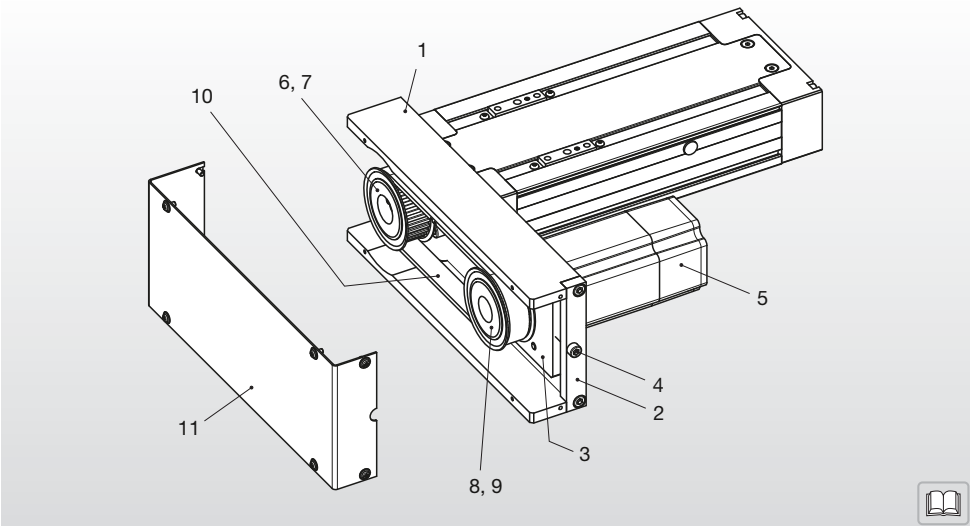

Position	Designation	Position	Designation
1	Belt drive housing	7	Compact unit clamping set
2	Belt clamping plate	8	Motor pinion
3	Motor plate	9	Motor clamping set
4	Clamping screw	10	Toothed belt
5	Motor	11	Cover plate
6	Compact unit pinion		

13.3 Calculation of the preload frequency

ß = Wrap angle [°]
b = Belt width [mm]
E = Axle base [mm]
E_{eff} = Effective axle base [mm]
f = Preload frequency of the belt [Hz]
F_U = Circumferential force [N]
F_{Uzul} = Permissible preload force [N]
F_V = Preload force [N]
L_F = Free span length [m]
L_R = Belt length [mm]
M_M = Motor torque [Nm]
m_{spec} = Specific toothed belt weight [kg/m]
n_M = Engine speed [rpm]
P = Power in [kW]
t = Division [mm]
v_M = Speed of the motor pinion [m/s]
z_M = Number of teeth of the motor [-]
z_{KE} = Number of teeth of the Compact Unit [-]

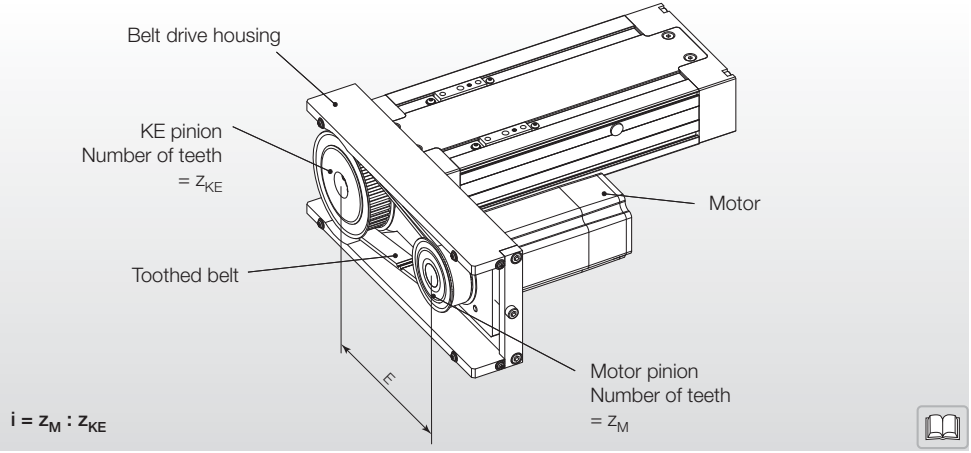

Nominal size	Reduction i	Axle base E [mm]	No. of teeth z_M	No. of teeth z_{KE}	Belt data Length L_R [mm]	Width b [mm]	Division t [mm]	Spec. Weight m_{spec} [kg/m]	Max. permissible preload force F_{Vzul} [N]
KE1...	1:1	92.5	28	28	325	15.0	5.0	0.065	330
	1:1.5	99.4	28	42	375	15.0	5.0	0.065	330
	1:2	94.8	21	42	350	15.0	5.0	0.065	330
KE2...	1:1	132.5	32	32	425	15.0	5.0	0.065	330
	1:1.5	135.0	32	48	475	15.0	5.0	0.065	330
	1:2	133.5	24	48	450	15.0	5.0	0.065	330
KE3...	1:1	132.5	32	32	425	15.0	5.0	0.065	330
	1:1.5	135.0	32	48	475	15.0	5.0	0.065	330
	1:2	133.5	24	48	450	15.0	5.0	0.065	330

1) Wrap angle ß

$$ß = 2 \cdot \arccos \cdot \left[\frac{t \cdot (z_{KE} - z_M)}{2 \cdot \pi \cdot E} \right] \quad [°]$$

2) Effective axle base E_{eff}

$$E_{eff} = \frac{1}{4} \cdot \left[L_R - \frac{t}{2} \cdot (z_{KE} + Z_M) + \sqrt{\left[L_R - \frac{t}{2} \cdot (z_{KE} + z_M) \right]^2 - 2 \cdot \left[\frac{t}{\pi} \cdot (z_{KE} - z_M) \right]^2} \right] \quad [mm]$$

3) Power P

$$P = \frac{M_M \cdot n_M}{9.55 \cdot 10^3} \quad kW$$

4) Speed of the motor pinion v_M

$$v_M = \frac{n_M \cdot z_M \cdot t}{60 \cdot 10^3} \quad [m/s]$$

5) Circumferential force F_U

$$F_U = \frac{P \cdot 10^3}{v_M} \quad [m/s]$$

6) Review F_U

$F_U \leq F_{Uzul}$

7) Preload force F_V

$$F_V = F_U \cdot \sin \frac{ß}{2} \cdot 0.61 \quad [N]$$

8) Free span length L_F

$$L_F = \sqrt{Eeff^2 - \frac{(z_{KE} - z_M)^2}{4}} \; / \; 1000 \quad [m]$$

9) Preload frequency of the belt f

$$f = \sqrt{\frac{F_U}{4 \cdot m \cdot L_F^2}} \quad [Hz] \; -0\% \; / \; +10\%$$

Notes

14. Connection plates

14.1 Measurement specifications of the connection plates with 1 carriage / 2 carriages

Aluminium connecting plates for LINE TECH AG Compact Units extend the mounting options. They also permit position-independent greasing, as sufficient grease points are available on the connecting plates.

Connection plates for KE with 1 carriage

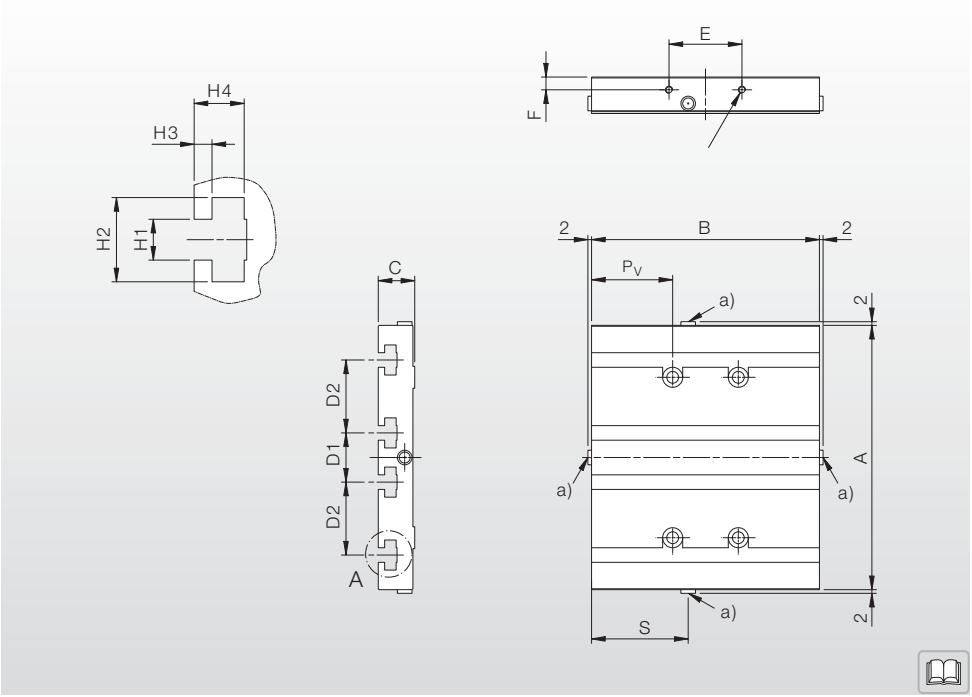

Nominal size	Dimensions [mm]													Mass	Item no.
	A	B	C	D1	D2	E	F	H1	H2	H3	H4	P_V	S	[kg]	
KE1.2...	90	60	16	20	20	30	8.5	6	12.0	3.5	7.7	16.5	37.0	0.183	KE1.2 plate
KE2.2...	110	60	16	20	20	40	7	6	12.0	3.5	7.7	15	37.5	0.213	KE2.2 plate
KE3.2...	145	125	20	27	40	40	7	8	16.5	3.5	9.8	44.5	53.0	0.727	KE3.2 plate

Connection plates for KE with 2 carriages

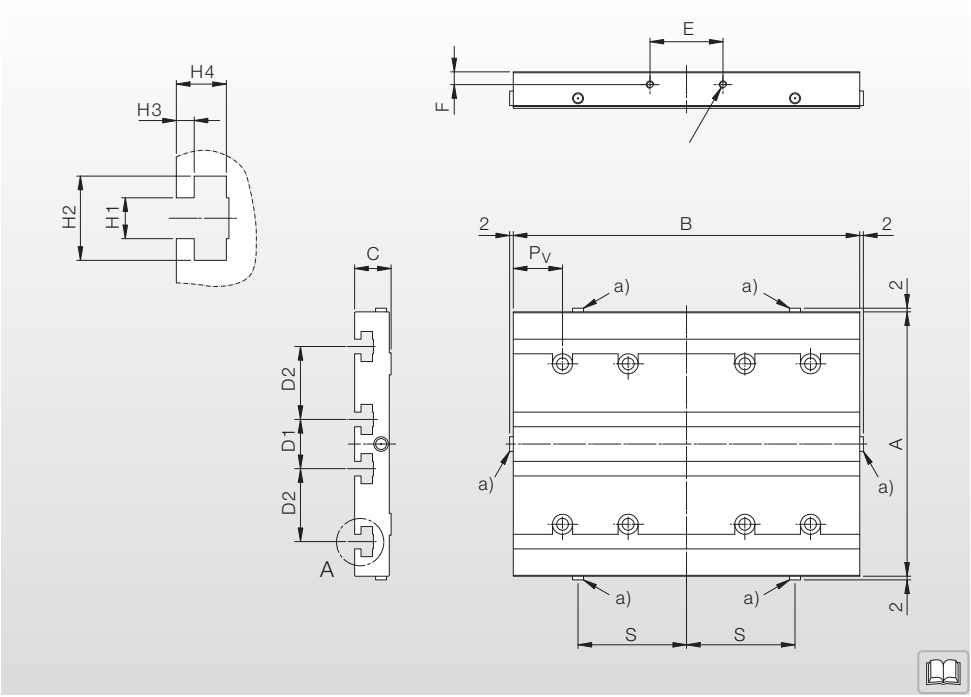

Nominal size	Dimensions [mm]													Mass	Item no.
	A	B	C	D1	D2	E	F	H1	H2	H3	H4	P_V	S	[kg]	
KE1.4...	90	125	16	20	20	30	8.5	6	12.0	3.5	7.7	16.5	15.0	0.385	KE1.4 plate
KE2.4...	110	155	16	20	20	40	7	6	12.0	3.5	7.7	20	35.0	0.565	KE2.4.plate
KE3.4...	145	190	20	27	40	40	7	8	16.5	3.5	9.8	27	59.5	1.100	KE3.4.plate

14.2 Assembly of the connection plates

LINE TECH AG offers order-based different standard connection plates (2+3). The connection plates can be retrofitted at any time.

It must be ensured during assembly the threaded pins (1) are removed. This is the only way to ensure a central lubrication via the connection plate.

Legend:
1) Threaded pin
2) Connection plate for a carriage
3) Connection plate for two carriages

The recommended tightening torques M_A can be found in the table → 7.3.

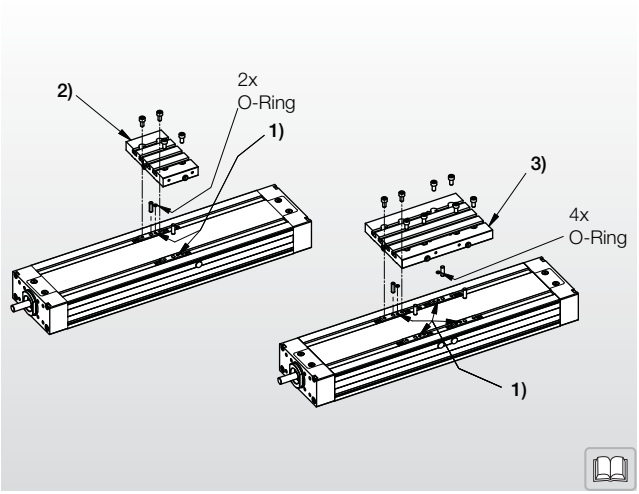

The screws are to be secured with Loctite. The recommended tightening torques M_A can be found in the table → 7.3

14.3 Separate connection plates

Separate connection and mounting plates can also be used. In this case, the dimensions shown are to be observed.

The same procedure as described below in section 14.2 applies for the assembly.

Legend:

1) Mounting by customer
2) Carriage
3) O-ring
4) Base profile

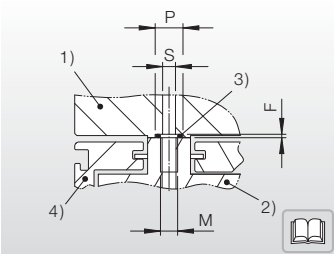

Dimensions [mm]										
Size	A	B	C	D	E	F	M	P	S	O-ring
KE1	54	-6.8	-6.8	6.8	65	0.8	M3	ø6.5	ø3	ø4x1
KE2	66	-7.5	-7.5	7.5	85	0.8	M4	ø6.5	ø3	ø4x1
KE3	88	11.5	11.5	-11.5	100	0.8	M5	ø6.5	ø3	ø4x1

14.4 Table substructures on connection plates

Sliding blocks with the corresponding groove width can be used to mount add-on parts on the connector plates (KE...V...).

Sliding block types NS6 and NS8 can be used in line with the groove width (see connection plates, section 14, paragraph 14.1 - 14.3). Sliding blocks are available from LINE TECH AG and are listed adjacently.

Size, material and connection thread as per the following order system must be defined as the order number.

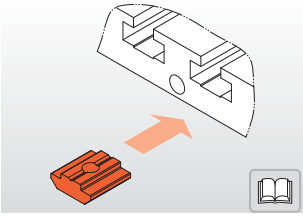

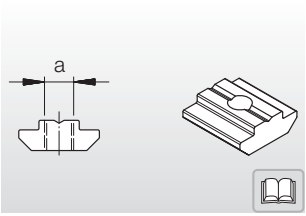

Dimensions [mm]		Material
Groove width	a (thread)	
6 (KE1 / KE2)	M4 / M5 / M6	Steel / stainless steel
8 (KE3)	M4 / M5 / M6 / M8	Steel / stainless steel

The screws are to be secured with Loctite. The recommended tightening torques M_A can be found in the table → 7.3

Example: NS6 St M5-KE **NS 6 St M5 -KE**

Sliding block NS

Groove width
6
8

Material
St = Steel
stainless = stainless

Thread size (Mass “a”)
M4 / M5
M6 / M8

for Compact Units KE

15. Cross table

15.1 Assembly

LINE TECH compact modules are also available as double-axis units (cross tables). A total of four mounting types are possible. The designation system opposite applies.

Mounting layout AC and AD cross tables are fitted using clamps. The lower unit must always be a version with two carriages and connector plate (KE…4…V…). For mounting layouts BC and BD, a special intermediate plate is fitted to the top units in addition.
The individual Compact Units must be ordered separately.

Accuracy
Standard accuracy for mounting cross tables is 0.1 mm/300 mm stroke.

Greater accuracy on request.

Designation system	KM	KE3	KE2	AC
Cross table mounting				
Abbreviation for lower axis KE1 / KE2 / KE3 (Attention: Version KE…4…V… is required)				
Abbreviation for upper axis KE1 / KE2 / KE3				
Mounting type AC / AD / BC / BD				

Dimensions A [mm]		Upper unit					
		KE1...		KE2...		KE3...	
Mounting type		A..	B..	A..	B..	A..	B..
Lower unit	KE1.4...V...	96	112	not possible			
	KE2.4...V...	106	122	116	132	not possible	
	KE3.4...V...	on request		135	151	150	169

Mounting layout AC

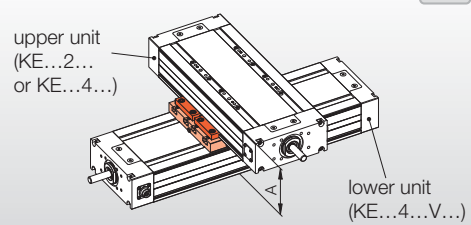

Mounting layout BC

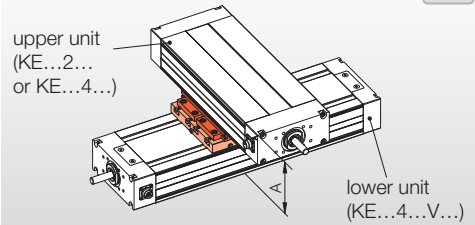

Mounting layout AD

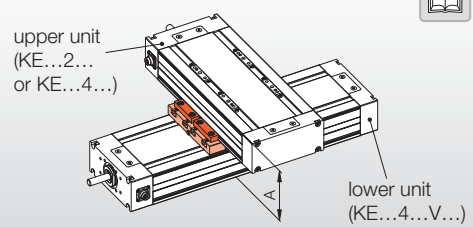

Mounting layout BD

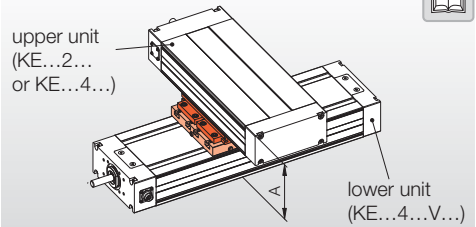

15.1.1 Cross table assembly type A... (Exploded view)

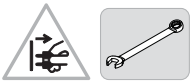

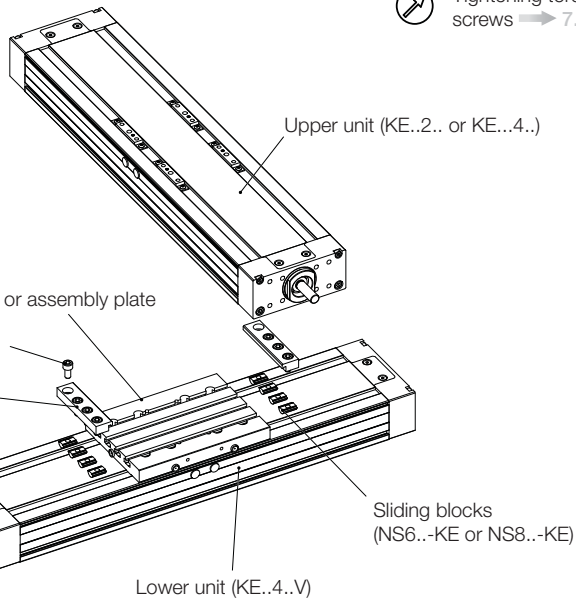

15.1.2 Cross table assembly type B... (Exploded view)

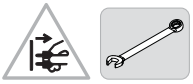

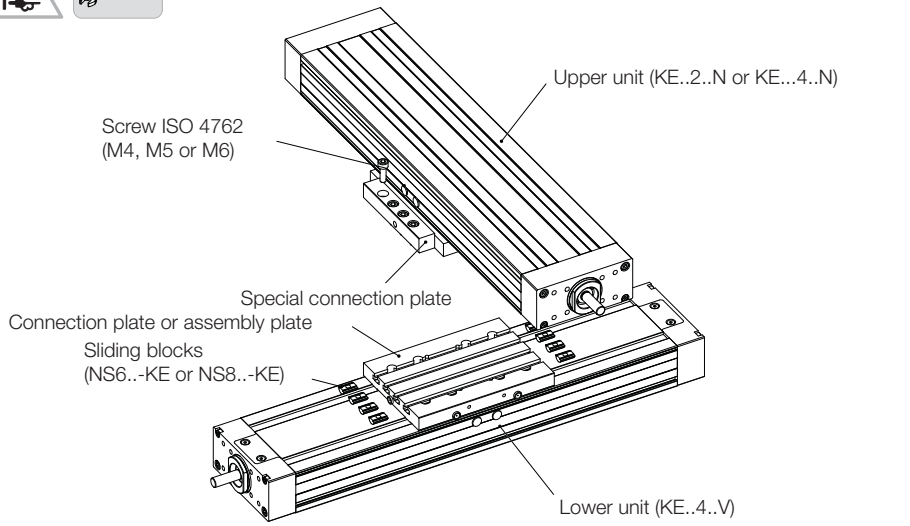

16. Commissioning

16.1 Operating conditions

Contact LINE TECH AG prior to commissioning for application areas with special operating conditions, such as in the presence of moisture, dirt, dust (fibre glass and wood), aggressive atmospheres, extreme climatic conditions and/or extreme temperature fluctuations, short-stroke and others.

Before commissioning the unit, check that the mounting means of the installed axis match the manufacturer's specifications with respect to the mass and acceleration and that they are secured.

Normal operating conditions		
Ambient temperature	10°C... 80°C	°C
Movement speed	≤ m/s	v
Rotational speed of the ball screw		
Load		

Minimal stroke	Type	Minimal stroke
Stroke	KE1	≥ 35 mm
	KE2	≥ 45 mm
	KE3	≥ 55 mm

16.2 Electrically connect the KE

Observe the safety regulations when working on electrical systems! The AC/DC supply must be connected by a qualified electrician.

Install the power cables and signal cables so that they are spatially separated! Do not install the product near devices that generate strong electromagnetic fields. This could impair the function. Observe the documentation of the controller used.

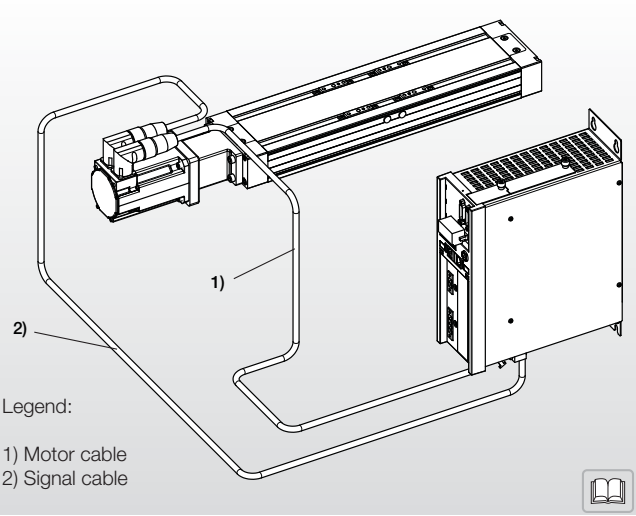

Check the EMERGENCY OFF switch prior to the first test run! Note the technical data about the Compact Units with ball screw → 8.2 - 8.4

Carry out a trial run only in the installed state combined with linear guides.

Check the internal protective equipment.

Check all screw connections to ensure they are tight.

Carry out the entire stroke at a low speed
Check the setting and function of the limit switch → 12.2

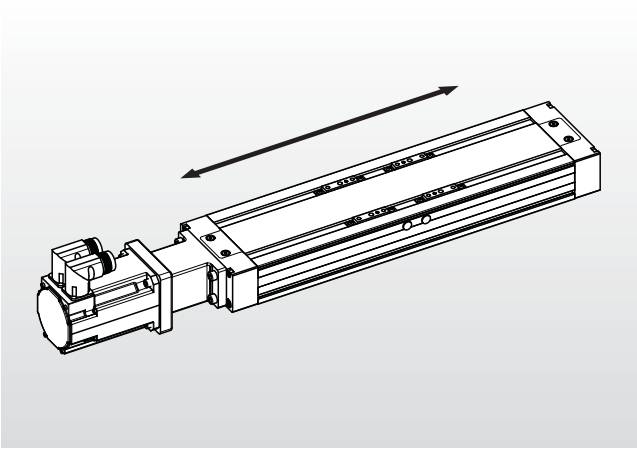

17. Operation

The Compact Unit with ball screw may only be used in accordance with the intended use provided by LINE TECH AG → 2
The Compact Unit with ball screw may only be operated under operating conditions that are approved by the manufacturer → 16.1

The Compact Unit must be checked for externally visible damage and defects. Externally attached mounting means, electrical cables and plug connections must be visually checked to ensure they are in a flawless condition.

If changes occur that put the safety of people and systems at risk, these are to be taken out of operation immediately.

18. Decommissioning

Disconnect the machine/system from the mains supply. To secure the machine from being switched on again without authorisation, actuate the emergency stop and attach the warning sign “Machine/system disconnected from mains supply”.

Remove the drive from the unit.

Unscrew the Compact Unit from the machine/system

19. Maintenance - Service - Upkeep

19.1 Lubricant Quantities, Lubrication Points, Lubrication Interval

The Compact Units may only be lubricated with grease.

The initial greasing is performed by LINE TECH AG. The bearings used are usually maintenance-free and do not have to be re-lubricated under normal conditions.

The Compact Units may only be lubricated with grease. LINE TECH AG recommends MICROLUBE GBU-Y 131 as a standard grease. If using other greases (other brands), the compatibility with the standard grease must be checked first. Observe the safety data sheet.

In the event of special operating conditions, inquire about the lubricant quantities. Values and information about lubricant quantities can be found in the adjacent table, corresponding to use under normal operating conditions

There are grease nipples on both sides of the carriage parts. It is sufficient if the amount of grease is pressed in from one side only.

Type	BSD d x P (mm)	Grease	Grease relubrication Carriage **A** (cm^3)	Grease relubrication Carriage **B** (cm^3)
KE1	12 x 5	Klüber Microlube GBU-Y 131	0.7	0.4
	12 x 10		0.7	
KE2	16 x 5		1.6	1.0
	16 x 10		1.8	
	16 x 16		1.9	
KE3	20 x 5		2.5	1.5
	20 x 10		2.9	
	20 x 20		3.2	

Depending on which value is reached first, the linear guides and the ball screw are to be relubricated according to the adjacent table

Type	BSD d x P (mm)	Operating interval (h)	Time interval (months)	Running interval (km)
KE1	12 x 5	500	3 - 6	250
	12 x 10			500
KE2	16 x 5	500	3 - 6	250
	16 x 10			500
	16 x 16			800
KE3	20 x 5	500	3 - 6	250
	20 x 10			500
	20 x 20			1 000

Different grease nipples exist on the Compact Units.

1) Grease nipples according to DIN 3405; the cover caps must be removed for lubrication. The carriage positions can be found in the table below for lubrication purposes.

2) The connection is according to the interface for customer add-on and can be found on the following page. The carriage positions for the purposes of lubrication are independent of the stroke.

3) Grease nipple according to DIN 3405; The carriage positions for the purposes of lubrication are independent of the stroke.

For pressing in the lubricant, we recommend the grease gun with the item number: ZPE.GREASEGUN-04

Procedure:

- Remove the cover caps
- Lubricate the table part(s)
- Calculate the amount of grease per stroke when lubricating with a hand press
- After lubricating with the hand press, close the nipple with a cover cap and remove excess grease with a clean cloth.

KE...2N...

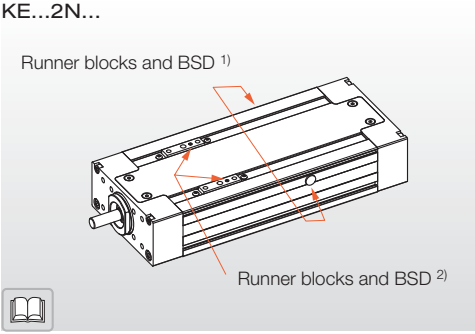

KE...2V...

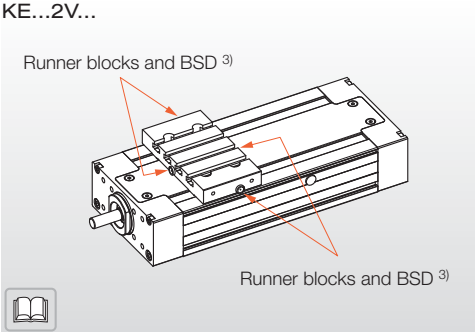

KE...4N...

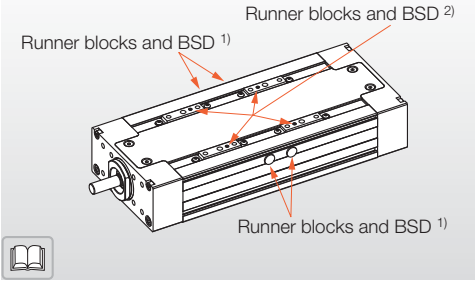

KE...4V...

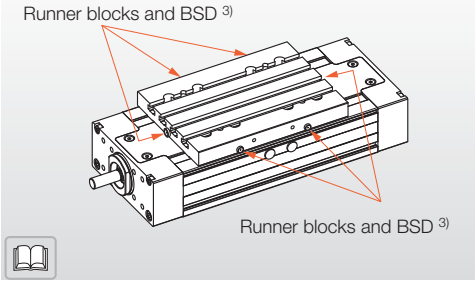

Carriage position for lubrication through the base profile

The Compact Unit can be maintained through two lubrication bore holes. Since the unit has central lubrication, it only has to be lubricated from one side. The lubrication positions can be found in the figure adjacent.

Separate lubrication

LINE TECH Compact Units can also be purchased with separate lubrication. In the case of separate lubrication, the three lubrication points must be lubricated so that all components are sufficiently supplied with grease.

☞ In these cases, the separate customer drawings are to be observed.

Lubrication position of the carriage when lubricating through the base profile

Type	2 runner blocks (1 carriage)	4 runner blocks (2 carriages)
	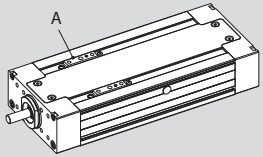	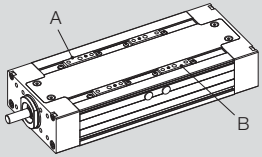
KE1	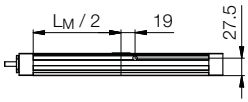 Carriage A: Stroke / 2	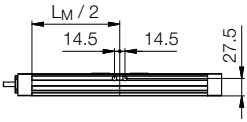 Carriage A: Stroke / 2 Carriage B: Stroke / 2 Both carriages can be lubricated in one position
KE2	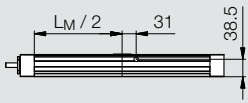 Carriage A: Stroke / 2	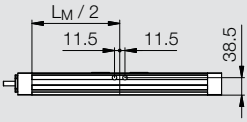 Carriage A: Stroke / 2 Carriage B: Stroke / 2 Both carriages can be lubricated in one position
KE3	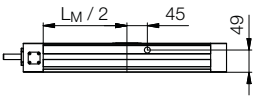 Carriage A: Stroke / 2	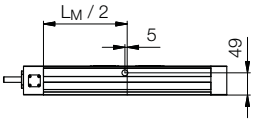 Carriage A: Stroke / 2 Carriage B: Stroke / 2 - 10 mm

The lubrication connectors in the carriages are sealed as standard by a grub screw. To use these lubrication points, the grub screws at the relevant positions must be removed.

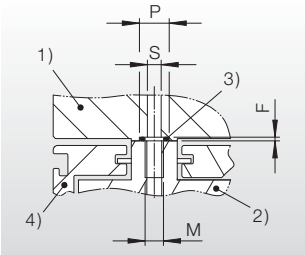

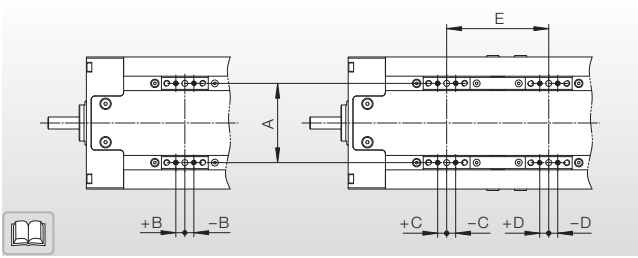

Legend:

1) Mounting by customer
2) Carriage
3) O-ring
4) Base profile

Dimensions [mm]										
Size	A	B	C	D	E	F	M	P	S	O-ring
KE1	54	-6.8	-6.8	6.8	65	0.8	M3	ø6.5	ø3	ø4x1
KE2	66	-7.5	-7.5	7.5	85	0.8	M4	ø6.5	ø3	ø4x1
KE3	88	11.5	11.5	-11.5	100	0.8	M5	ø6.5	ø3	ø4x1

LINE TECH®

Linear movements are the backbone of modern, industrial production systems. LINE TECH AG has been involved in linear technology solutions for more than 20 years. A comprehensive range of components as well as linear and positioning systems, combined with the specialist expertise of our employees, is the stand-out benefit of LINE TECH AG.

Matured services, from engineering to design, in conjunction with flexible production, complement the product offering, thereby offering customers a high level of benefit.

In-house products

In-house products from LINE TECH are modular, ready-to-install linear axles:

- Linear Modules
- Bridge Modules
- Compact Units
- Positioning Units

Systems / Assemblies

Our engineering team develops tailor-made solutions in accordance with customer requirements.

Components

Trade products complement the product offering with linear guides, drives and components:

- Linear guides
- Ball screws
- Roller linear guides
- Ball bushings and shafts
- Ball casters
- Extensive range of accessories
- Megatorque motors
- Linear motors

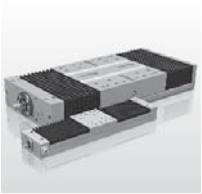
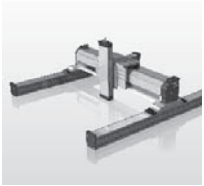

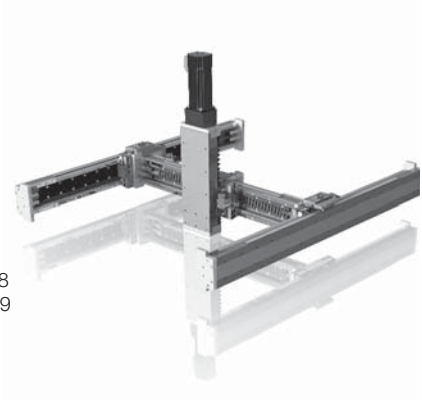

LINE TECH AG
Europastrasse 19
CH-8152 Glattbrugg
Switzerland

Tel: +41 (0) 43 211 68 68
Fax: +41 (0) 43 211 68 69
info@linetech.ch

www.linetech.ch